Data Sheet

Customer:	
Product:	Automotive Grade Pulse Withstanding Chip Resistor – PWR..A Series
Size:	0402/0603/0805/1206/1210/2010/2512
Issued Date:	15-Jun-22
Edition:	REV.A3

VIKING TECH CORPORATION
光頡科技股份有限公司
No.70 Guangfu N. Rd., Hukou Township, Hsinchu County 303, Taiwan

TEL:886-3-5972931
FAX:886-3-5972935•886-3-5973494
E-mail:sales@viking.com.tw

VIKING TECH CORPORATION KAOHSIUNG BRANCH
光頡科技股份有限公司高雄分公司
No.248-3, Sin-Sheng Rd., Cian-Jhen Dist., Kaohsiung, 806, Taiwan

TEL:886-7-8217999
FAX:886-7-8228229
E-mail:sales@viking.com.tw

VIKING ELECTRONICS (WUXI) CO., LTD.
光頡電子(無錫)有限公司
No.22 Xixia Road, Machinery & Industry Park, National Hi-Tech Industrial Development Zone of Wuxi, Wuxi, Jiangsu Province, China
Zip Code:214028
TEL:86-510-85203339
FAX:86-510-85203667•86-510-85203977
E-mail:china@viking.com.tw

Produced by (QC)	Checked (QC)	Approved by (QC)	Prepared by (Sales)	Accepted by (Customer)
15-Jun-22	15-Jun-22	15-Jun-22		
Alice Hsiao	***Susan Huang***	***Susan Huang***		

Automotive Grade Pulse Withstanding Chip Resistor – PWR..A Series

■Features

- Tolerance from ±0.5%~5%
- High power rating
- Excellent pulse withstanding performance
- Improved working voltage ratings
- Standard package sizes of 0402~2512
- Special construction to prevent sulfuration in a sulfur containing environment
- AEC-Q200 Compliance
- 100% CCD inspection

■Applications

- Metering (Testing/Measurement)
- Diagnostic Equipment
- Medical Devices
- Industrial Controls
- Plasma
- LCD Video Monitors

■Construction

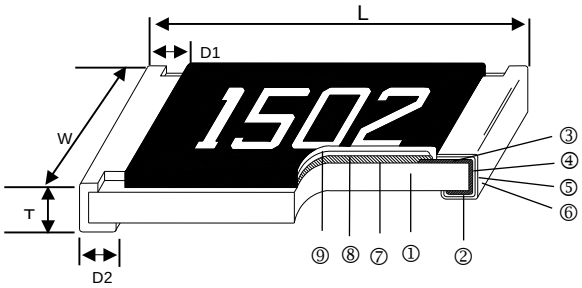

①	Alumina Substrate	⑥	External Electrode
②	Bottom Electrode	⑦	Resistor Layer
③	Top Electrode	⑧	Primary Overcoat
④	Edge Electrode	⑨	Secondary Overcoat
⑤	Barrier Layer		

■Dimensions

Type	Size (Inch)	L (mm)	W (mm)	T (mm)	D1 (mm)	D2 (mm)	Weight (g) (1000pcs)
PWR02	0402	1.00±0.05	0.50±0.05	0.35±0.05	0.20±0.10	0.20±0.10	0.63
PWR03	0603	1.60±0.10	0.80±0.10	0.45±0.10	0.30±0.20	0.30±0.20	2.042
PWR05	0805	2.00±0.10	1.25±0.10	0.50±0.10	0.35±0.20	0.40±0.20	4.368
PWR05 (1/2W)	0805	2.00±0.10	1.25±0.10	0.55±0.10	0.35±0.20	0.40±0.20	5
PWR06	1206	3.10±0.10	1.55±0.10	0.55±0.10	0.50±0.25	0.50±0.20	8.947
PWR06 (3/4W)	1206	3.10±0.10	1.55±0.10	0.55±0.10	0.60±0.25	0.55±0.25	9.2
PWR13	1210	3.10±0.10	2.60±0.15	0.55±0.10	0.50±0.25	0.50±0.20	15.959
PWR10	2010	5.00±0.10	2.50±0.15	0.55±0.10	0.60±0.25	0.50±0.20	24.241
PWR12	2512	6.35±0.10	3.10±0.15	0.55±0.10	0.60±0.25	0.50±0.20	39.448
PWR12 (2W)	2512	6.35±0.20	3.15±0.15	0.60±0.10	0.80±0.25	0.60±0.30	42

■Derating Curve

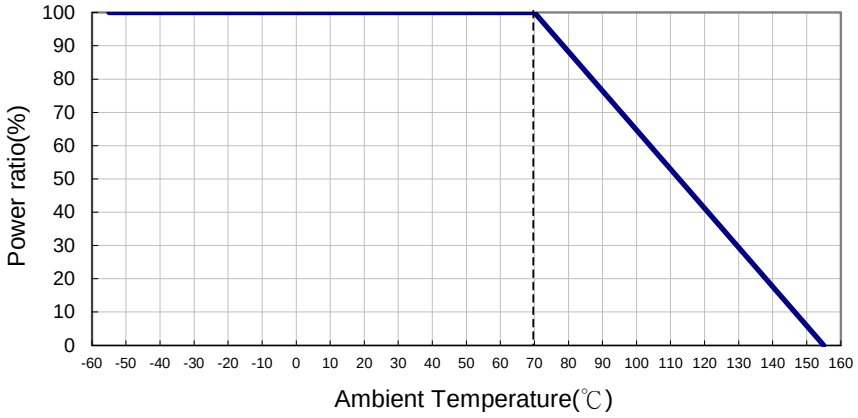

■Part Numbering

PWR	12	J	T	E	S	1001	A
Product Type	Dimensions	Resistance Tolerance	Packaging Code	TCR (PPM/°C)	Power Rating	Resistance	Marking
	02: 0402 03: 0603 05: 0805 06: 1206 13: 1210 10: 2010 12: 2512	D: ±0.5% F: ±1% J: ±5% -: No specified	T: 7"Taping Reel V:10"Taping Reel W:13"Taping Reel	E: ±100 F: ±200 G: ±300 4: ±350 -: No specified	A: 1.5W T: 1W Q: 3/4W U: 1/2W G: 2/5W O: 1/3W V : 1/4W W: 1/8W X: 1/10W P: 1/5W S: 2W	1001: 1KΩ 1004: 1MΩ R0R0: 0Ω	A: Automotive Grade NA: Automotive Grade & No Marking

■Standard Electrical Specifications

Item / Type	Power Rating at 70°C	Operating Temp. Range	Max. Operating Voltage	Max. Overload Voltage	Resistance Range ±0.5% (E24,E96)	Resistance Range ±1% (E24,E96)	Resistance Range ±5% (E24)	TCR (PPM/°C)
PWR02 (0402)	1/5W	-55 ~ +155°C	50V	100V	-	1Ω-20Ω		±300
					100Ω-1MΩ	20.5Ω-1MΩ		±100
PWR03 (0603)	1/10W	-55 ~ +155°C	50V	100V	10Ω - 294Ω	1Ω - 294Ω		±200
					300Ω - 1MΩ			±100
PWR05 (0805)	1/8W	-55 ~ +155°C	150V	300V	10Ω - 294Ω	1Ω - 294Ω		±200
					300Ω - 20MΩ			±100
PWR06 (1206)	1/3W	-55 ~ +155°C	200V	400V	10Ω - 20Ω	1Ω - 20Ω		±200
					20.5Ω - 20MΩ			±100
PWR13 (1210)	1/2W	-55 ~ +155°C	200V	400V	10Ω - 20Ω	1Ω - 20Ω		±200
					20.5Ω - 20MΩ			±100
PWR10 (2010)	3/4W	-55 ~ +155°C	400V	800V	10Ω - 20Ω	1Ω - 20Ω		±200
					20.5Ω - 20MΩ			±100
PWR12 (2512)	1.5W	-55 ~ +155°C	500V	1000V	10Ω - 20Ω	1Ω - 20Ω		±200
					20.5Ω - 20MΩ			±100

■High Power & Ultra High Power Rating Electrical Specifications

Type \ Item	Power Rating at 70°C / Jumper Rated Current	Operating Temp. Range	Max. Operating Voltage	Max. Overload Voltage	Resistance Range ±0.5% (E24,E96)	Resistance Range ±1% (E24,E96)	Resistance Range ±5% (E24)	TCR (PPM/°C)
PWR03 (0603)	1/4W	-55 ~ +155°C	75V	150V	10Ω - 294Ω	1Ω - 294Ω		±200
					300Ω - 1MΩ			±100
	Jumper: 5A*				-		0Ω(≦8mΩ)	-
PWR05 (0805)	2/5W	-55 ~ +155°C	150V	300V	10Ω - 294Ω	1Ω - 294Ω		±200
					300Ω - 1MΩ			±100
PWR05 (0805)	1/2W *	-55 ~ +155°C	400V	600V	10Ω - 294Ω	1Ω - 294Ω		±200
					300Ω - 1MΩ			±100
	Jumper: 6A*				-		0Ω(≦5mΩ)	-
PWR06 (1206)	1/2W	-55 ~ +155°C	200V	400V	10Ω - 20Ω	1Ω - 20Ω		±200
					20.5Ω - 1MΩ			±100
PWR06 (1206)	3/4W *	-55 ~ +155°C	500V	1000V	10Ω - 20Ω	1Ω - 20Ω		±200
					20.5Ω - 1MΩ			±100
	Jumper: 10A*				-		0Ω(≦5mΩ)	-
PWR13 (1210)	3/4W	-55 ~ +155°C	200V	400V	10Ω - 20Ω	1Ω - 20Ω		±200
					20.5Ω - 1MΩ			±100
PWR10 (2010)	1W	-55 ~ +155°C	400V	800V	10Ω - 20Ω	1Ω - 20Ω		±200
					20.5Ω - 1MΩ			±100
PWR12 (2512)	2W *	-55 ~ +155°C	500V	1000V	10Ω	1Ω - 10Ω		±350
					10.2Ω-200K			±100

*: Ultra High Power: double side printed resistor element

Operating Voltage=$\sqrt{(P*R)}$ or Max. Operating Voltage listed above, whichever is lower.

Overload Voltage=2.5*$\sqrt{(P*R)}$ or Max. Overload Voltage listed above, whichever is lower.

The power rating depends on the maximum temperature of the resistive element. Due to the power dissipation of the resistor, the temperature of the resistive element will rise depending on the condition of heat dissipation from PCB. The maximum power rating in application only applies if the temperature of the resistive element is not exceed 155℃.

■ Viking is capable of manufacturing the optional spec based on customer's requirement.

■Soldering Condition (Ref. IPC/JEDEC J-STD-020 & J-STD-002)

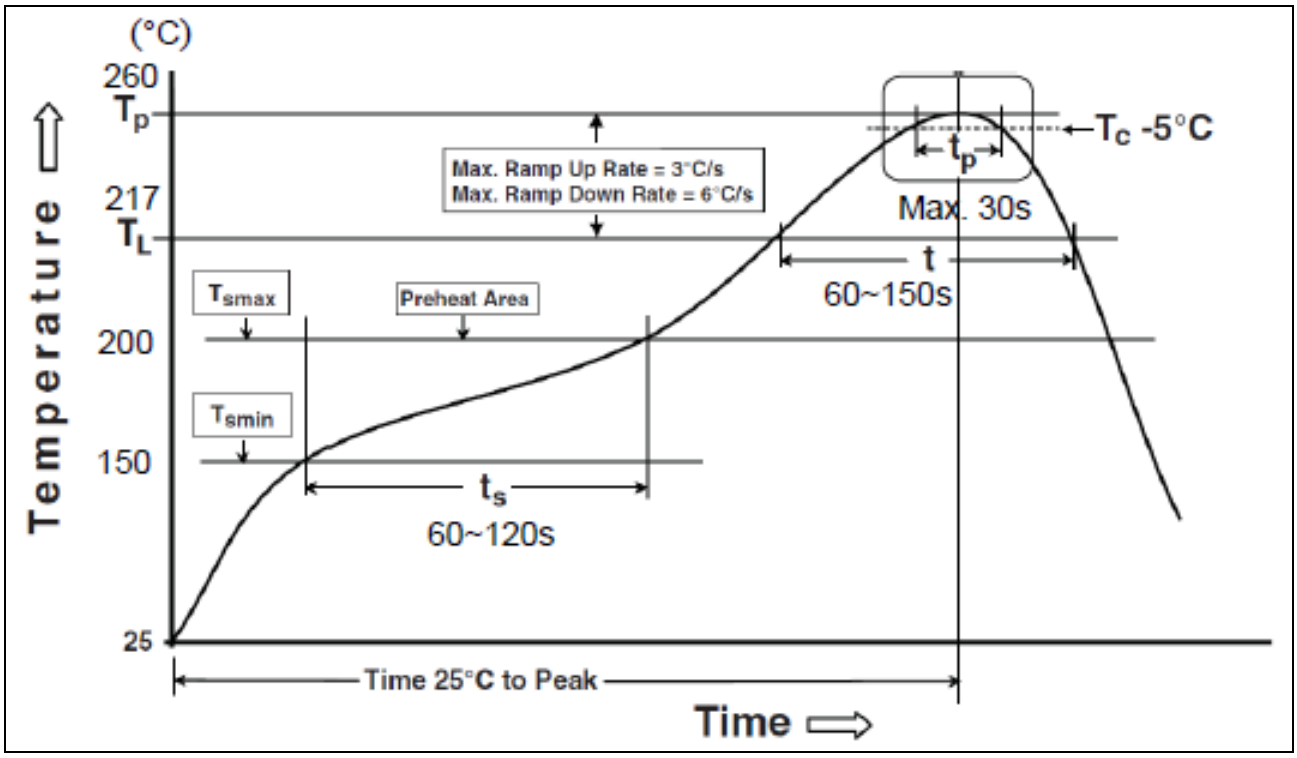

Reflow Profiles	
Profile Feature	**Pb-Free Assembly**
Preheat Min. Temperature (Tsmin) Max Temperature (Tsmax) Preheating time (ts) from (Tsmin to Tsmax)	 150 °C 200 °C 60-120 seconds
Ramp-up rate (T_L to Tp)	3 °C/second max.
Liquidous temperature (T_L) Time (t_L) maintained above T_L	217 °C 60-150 seconds
Min. Peak temperature (Tp min)	235°C
Max. Peak temperature (Tp max)	260°C
Time (tp) within 5 °C of the specified classification temperature (Tc)	30 seconds max.
Ramp-down rate (Tp to T_L)	6 °C/second max.
Time 25 °C to peak temperature	8 minutes max.

■Environmental Characteristics

Item	Requirement		Test Method
	±5% and Below	Jumper	
Temperature Coefficient of Resistance (T.C.R.)	As Spec.		**JIS-C-5201-1 4.8** **IEC-60115-1 4.8** At 25°C/-55°C and 25°C/+125°C, 25°C is the reference temperature
Short Time Overload	±(1.0%+0.05Ω)	0603: ≦8mΩ 0805: ≦5mΩ 1206: ≦5mΩ	**JIS-C-5201-1 4.13** **IEC-60115-1 4.13** RCWV*2.5 or Max. Overload Voltage whichever is lower for 5 seconds Jumper:2*I_{max} for 5 seconds
Insulation Resistance	≥10G		**JIS-C-5201-1 4.6** **IEC-60115-1 4.6** Max. Overload Voltage for 1 minute
Operational Life	±(1.0%+0.05Ω)	0603: ≦8mΩ 0805: ≦5mΩ 1206: ≦5mΩ	**MIL-STD-202 Method 108** Condition D Steady State TA=125°C at derated power. Measurement at 24±4 hours after test conclusion.
Biased Humidity	±(1.0%+0.05Ω)	0603: ≦8mΩ 0805: ≦5mΩ 1206: ≦5mΩ	**MIL-STD-202 Method 103** 1000 hrs 85°C/85%RH 10% of operating power
High Temperature Exposure	±(1.0%+0.05Ω)	0603: ≦8mΩ 0805: ≦5mΩ 1206: ≦5mΩ	**MIL-STD-202 Method 108** at +155°C for 1000 hrs
Board Flex	±(1.0%+0.05Ω)	0603: ≦8mΩ 0805: ≦5mΩ 1206: ≦5mΩ	**AEC-Q200-005** Bending once for 60 seconds 2010, 2512 sizes: 2mm Other sizes: 3mm
Solderability	95% min. coverage		**JIS-C-5201-1 4.17** **IEC-60115-1 4.17** 245±5°C for 3 seconds
Resistance to Soldering Heat	±(0.5%+0.05Ω)	0603: ≦8mΩ 0805: ≦5mΩ 1206: ≦5mΩ	**JIS-C-5201-1 4.18** **IEC-60115-1 4.18** 260±5°C for 10 seconds
Voltage Proof	No breakdown or flashover		**JIS-C-5201-1 4.7** **IEC-60115-1 4.7** 1.42 times Max. Operating Voltage for 1 minute
Leaching	Individual leaching area ≦5% Total leaching area ≦ 10%		**JIS-C-5201-1 4.18** **IEC-60068-2-58 8.2.1** 260±5°C for 30 seconds
Temperature Cycling	±(0.5%+0.05Ω)	0603: ≦8mΩ 0805: ≦5mΩ 1206: ≦5mΩ	**JESD22 Method JA-104** -55°C to +125°C, 1000 cycles
Mechanical Shock	±(0.25%+0.05Ω)	0603: ≦8mΩ 0805: ≦5mΩ 1206: ≦5mΩ	**MIL-STD-202 Method 213** Wave Form: Tolerance for half sine shock pulse. Peak value is 100g's. Normal duration (D) is 6.
Vibration	±(0.5%+0.05Ω)	0603: ≦8mΩ 0805: ≦5mΩ 1206: ≦5mΩ	**MIL-STD-202 Method 204** 5 g's for 20 min., 12 cycles each of 3 orientations, 10-2000 Hz
ESD	±(3%+0.05Ω)		**AEC-Q200-002** Human body model 0402/0603: 1KV 0805 and above: 2KV
Resistance to Solvents	No visible damage on appearance and marking.		**MIL-STD-202 Method 215** Add Aqueous wash chemical - OKEM Clean or equivalent. Do not use banned solvents.
Terminal Strength	No broken		**AEC-Q200-006** Force of 1.8kg for 60 seconds.

Item	Requirement		Test Method
	±5% and Below	Jumper	
Flammability	No ignition of the tissue paper or scorching or the pinewood board		**UL-94** V-0 or V-1 are acceptable. Electrical test not required.
Sulfur Test	△R±1%	0603: ≦8mΩ 0805: ≦5mΩ 1206: ≦5mΩ	**EIA-977 (Condition A)** 60±2°C, no power rating for 500 hrs.

RCWV(Rated Continuous Working Voltage)=√(P*R) or Max. Operating Voltage whichever is lower.

■Storage Temperature: 15~28°C; Humidity < 80%RH

■Shelf Life: 2 years from production date.

■Packaging

Reel Specifications & Packaging Quantity

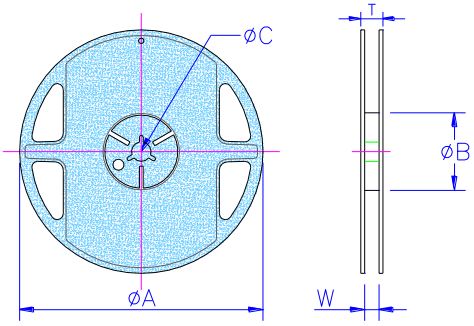

Type	Packaging Quantity		Tape Width	Reel Diameter	ΦA (mm)	ΦB (mm)	ΦC (mm)	W (mm)	T (mm)
PWR02	Paper	10K	8mm	7 inch	178.5±1.5	$60^{+1/-0}$	13.0±0.2	9.0±0.5	12.5±0.5
		20K	8mm	10 inch	254±1.0	100±0.5	13.0±0.2	9.5±0.5	13.5±0.5
		40K	8mm	13 inch	330±1.0	100±0.5	13.0±0.2	9.5±0.5	13.5±0.5
PWR03 PWR05 PWR06 PWR13	Paper	5K	8mm	7 inch	178.5±1.5	$60^{+1/-0}$	13.0±0.2	9.0±0.5	12.5±0.5
		10K	8mm	10 inch	254±1.0	100±0.5	13.0±0.2	9.5±0.5	13.5±0.5
		20K	8mm	13 inch	330±1.0	100±0.5	13.0±0.2	9.5±0.5	13.5±0.5
PWR10 PWR12	Embossed	4K	12mm	7 inch	178.5±1.5	$60^{+1/-0}$	13.0±0.5	13.0±0.5	15.5±0.5
		8K	12mm	10 inch	250±1.0	62±0.5	13.0±0.5	12.5±0.5	16.5±0.5

Paper Tape Specifications

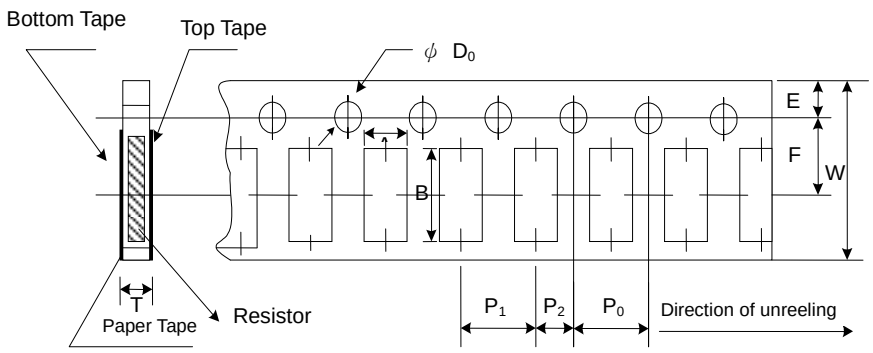

Type	A (mm)	B (mm)	W (mm)	E (mm)	F (mm)	P_0 (mm)	P_1 (mm)	P_2 (mm)	ΦD_0 (mm)	T (mm)
PWR02	0.65±0.10	1.15±0.10	8.0±0.2	1.75±0.1	3.50±0.05	4.00±0.10	2.00±0.05	2.00±0.05	1.50+0.1,-0	0.45±0.1
PWR03	1.10±0.10	1.90±0.1	8.0±0.2	1.75±0.1	3.50±0.05	4.00±0.10	4.00±0.05	2.00±0.05	1.50+0.1,-0	0.70±0.1
PWR05	1.60±0.10	2.40±0.2	8.0±0.2	1.75±0.1	3.50±0.05	4.00±0.10	4.00±0.05	2.00±0.05	1.50+0.1,-0	0.85±0.1
PWR06	1.90±0.10	3.50±0.2	8.0±0.2	1.75±0.1	3.50±0.05	4.00±0.10	4.00±0.05	2.00±0.05	1.50+0.1,-0	0.85±0.1
PWR13	2.90±0.10	3.50±0.2	8.0±0.2	1.75±0.1	3.50±0.05	4.00±0.10	4.00±0.05	2.00±0.05	1.50+0.1,-0	0.85±0.1

Embossed Plastic Tape Specifications

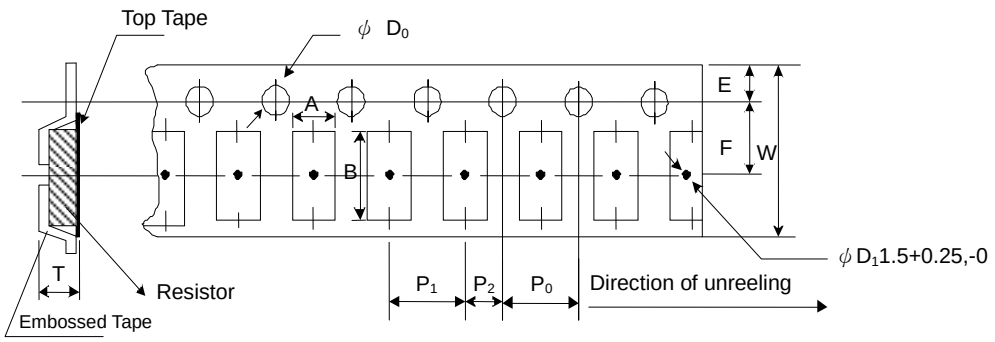

Type	A (mm)	B (mm)	W (mm)	E (mm)	F (mm)	P_0 (mm)	P_1 (mm)	P_2 (mm)	ΦD_0 (mm)	T (mm)
PWR10	2.8±0.10	5.40±0.20	12.0±0.3	1.75±0.1	5.5±0.05	4.00±0.10	4.00±0.1	2.00±0.05	1.50+0.1, -0	1.2^{+0}
PWR12	3.5±0.10	6.70±0.10	12.0±0.3	1.75±0.1	5.5±0.05	4.00±0.10	4.00±0.1	2.00±0.05	1.50+0.1, -0	1.2^{+0}

■Marking

No Marking for 0402

0805~2512 4 digits marking for Example

Resistance	5.6Ω	97.6Ω	100Ω	2.2KΩ	10KΩ	49.9KΩ	100KΩ	1MΩ
marking	5R60	97R6	1000	2201	1002	4992	1003	1004

0603: 3 digits marking in E24

Example: 101=100Ω 102=1KΩ (1st and 2nd are E24 code and 3rd code is multiplier)

E24 code	10	11	12	13	15	16	18	20	22	24	27	30	33	36	39	43	47	51	56	62	68	75	82	91

1% for 0603: 3 digits marking in E96 (E96 series except E24 series)

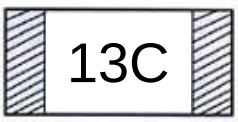

digits marking for Example: 13C=13K3Ω 68B=4K99Ω 68X=49.9Ω

Marking Table

Code	E96	Code	E96	Code	E96	Code	E96
02	102	**28**	191	**52**	340	**75**	590
03	105	**29**	196	**53**	348	**76**	604
04	107	**31**	205	**54**	357	**77**	619
06	113	**32**	210	**55**	365	**78**	634
07	115	**33**	215	**56**	374	**79**	649
08	118	**34**	221	**57**	383	**80**	665
09	121	**35**	226	**58**	392	**81**	681
10	124	**36**	232	**59**	402	**82**	698
11	127	**37**	237	**60**	412	**83**	715
13	133	**38**	243	**61**	422	**84**	732
14	137	**39**	249	**62**	432	**86**	768
15	140	**40**	255	**63**	442	**87**	787
16	143	**41**	261	**64**	453	**88**	806
17	147	**42**	267	**65**	464	**89**	825
19	154	**43**	274	**66**	475	**90**	845
20	158	**44**	280	**67**	487	**91**	866
21	162	**45**	287	**68**	499	**92**	887
22	165	**46**	294	**69**	511	**93**	909
23	169	**47**	301	**70**	523	**94**	931
24	174	**48**	309	**71**	536	**95**	953
25	178	**49**	316	**72**	549	**96**	976
26	182	**50**	324	**73**	562		
27	187	**51**	332	**74**	576		

Code	A	B	C	D	E	F	G	X	Y		
Multiplier	10^0	10^1	10^2	10^3	10^4	10^5	10^6	10^{-1}	10^{-2}		

■Recommend Land Pattern

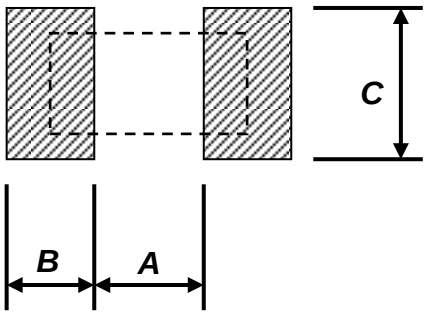

Type	A (mm)	B (mm)	C (mm)
PWR02	0.50	0.45	0.60
PWR03	0.90	0.60	0.90
PWR05	1.20	0.70	1.30
PWR06	2.00	0.90	1.60
PWR13	2.00	0.90	2.80
PWR10	3.80	0.90	2.80
PWR12	4.90	1.00	3.40

■Lightning Surge

Resistors are tested in accordance with IEC 60115-1 using both 1.2/50us and 10/700 pulse shapes. The limit of acceptance is a shift in resistance of less than 1% from the initial value.

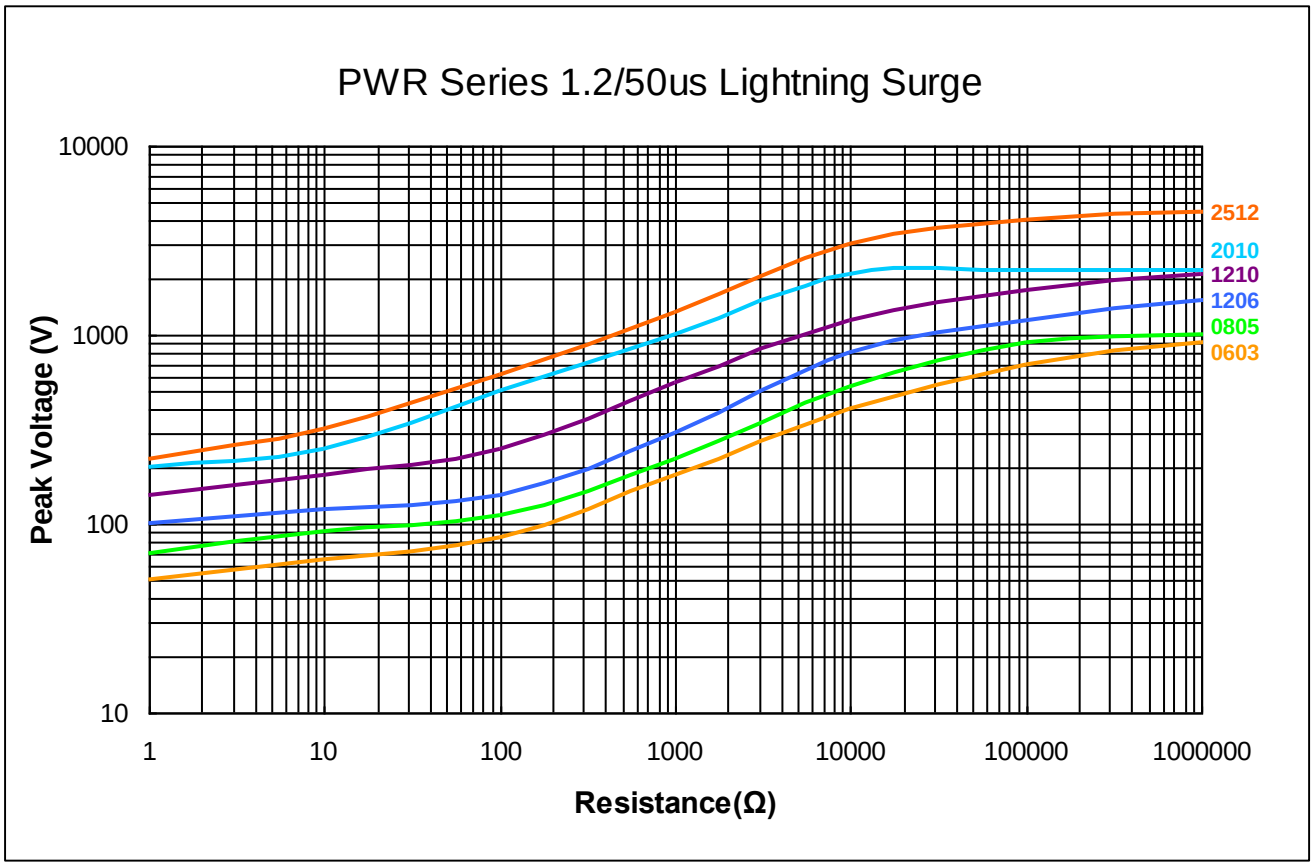

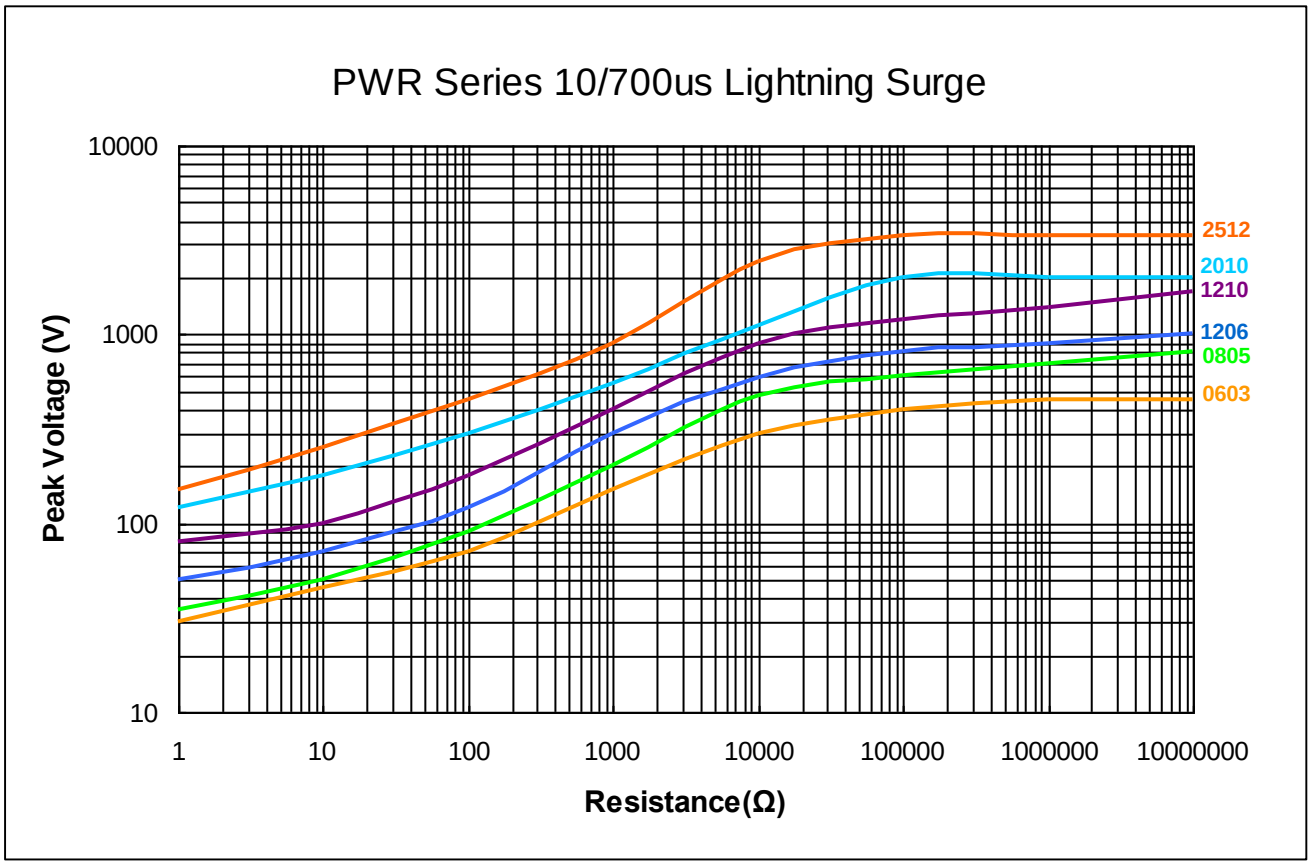

■Pulse withstanding capacity

The limit of acceptance was a shift in resistance of less than 1% from the initial value. The power applied was subject to the restrictions of the maximum permissible impulse voltage graph shown.

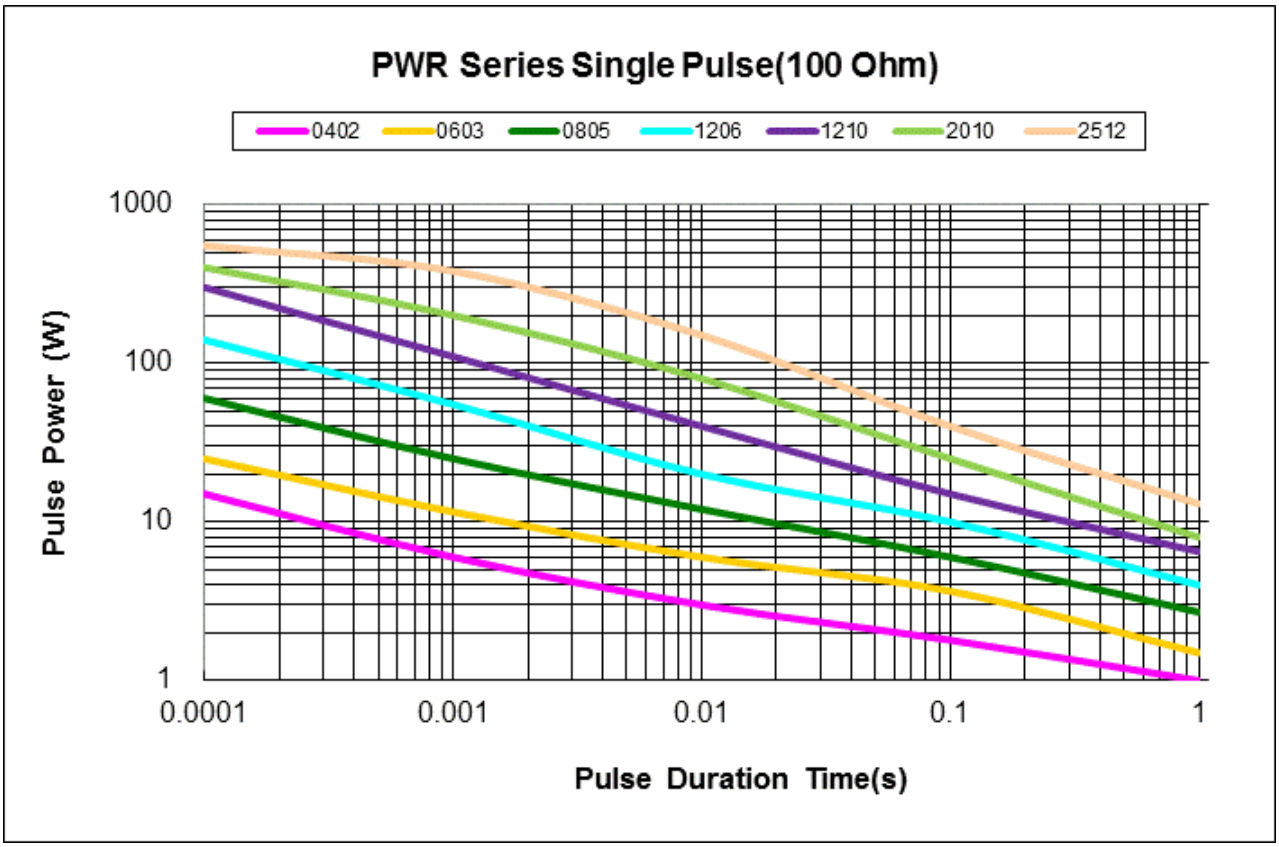

■Continuous Pulse

The continuous load graph was obtained by applying repetitive rectangular pulses where the pulse period was adjusted so that the average power dissipated in the resistor was equal to its rated power at 70°C. Again the limit of acceptance was a shift in resistance of less than 1% from the initial value.

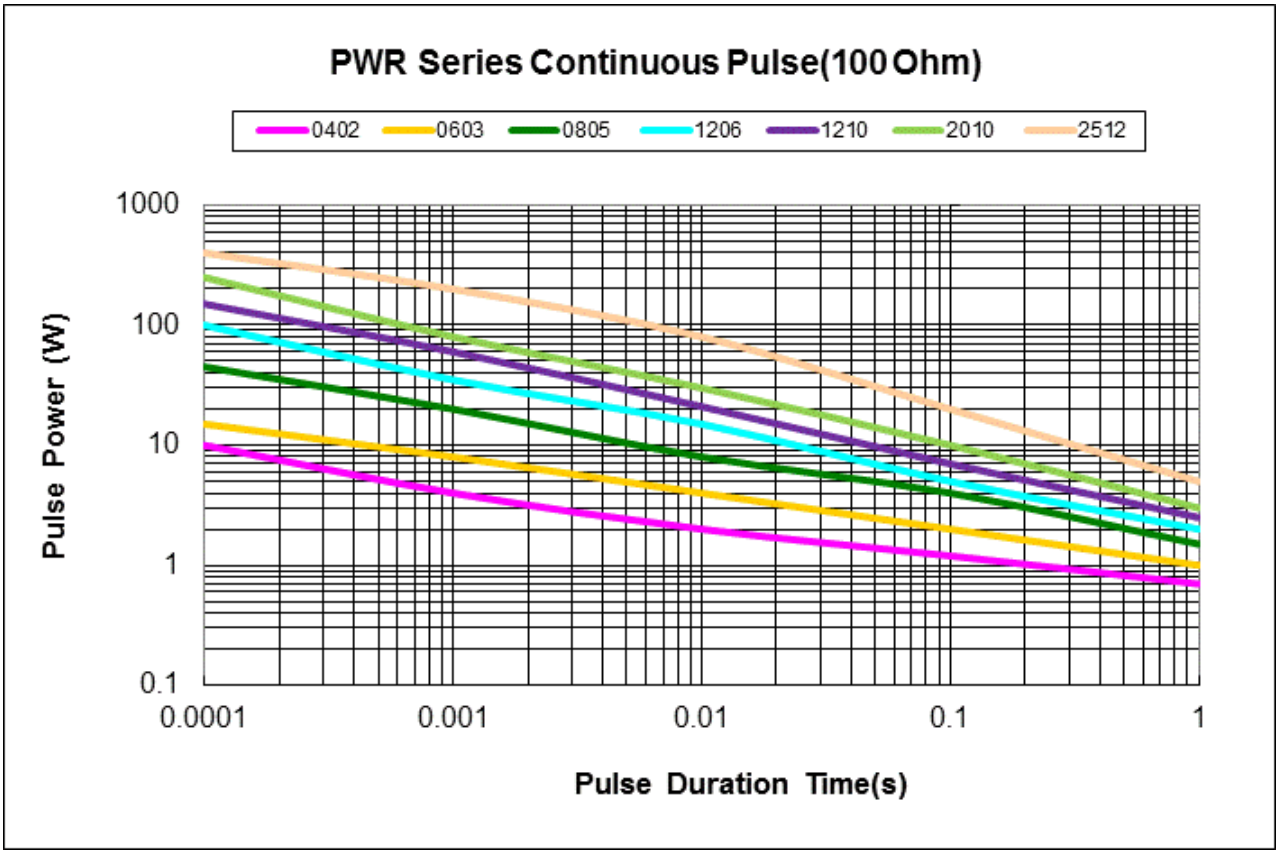

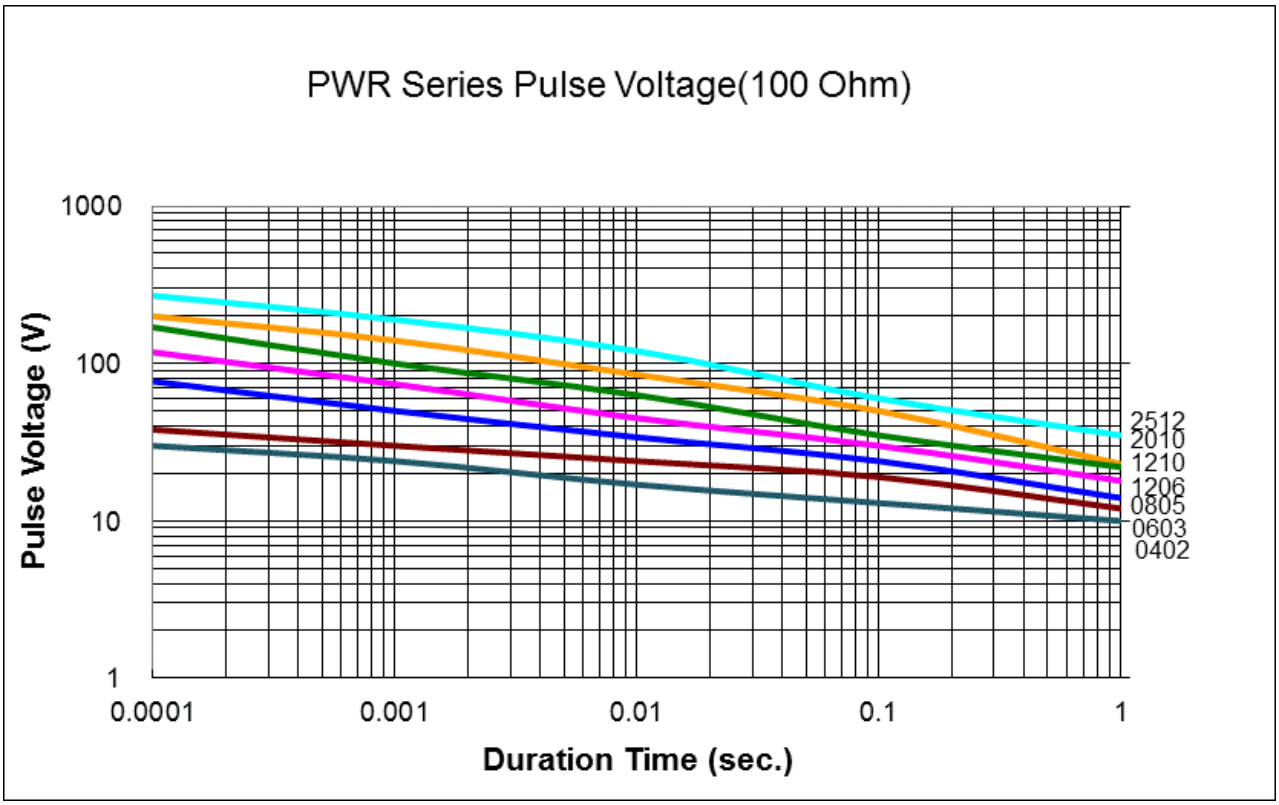

REVISION HISTORY

REVISION	DATE	CHANGE NOTIFICATION	DESCRIPTION
Version A	Mar 10, 2021	-	- New product release
Version A1	Nov 15, 2021	-	- Increase the shelf life description
Version A2	Feb 15, 2022	-	- Derating Curve changes the temperature range
Version A3	Jun 15, 2022	-	- Modify Soldering Condition