Art.-Number: 701116

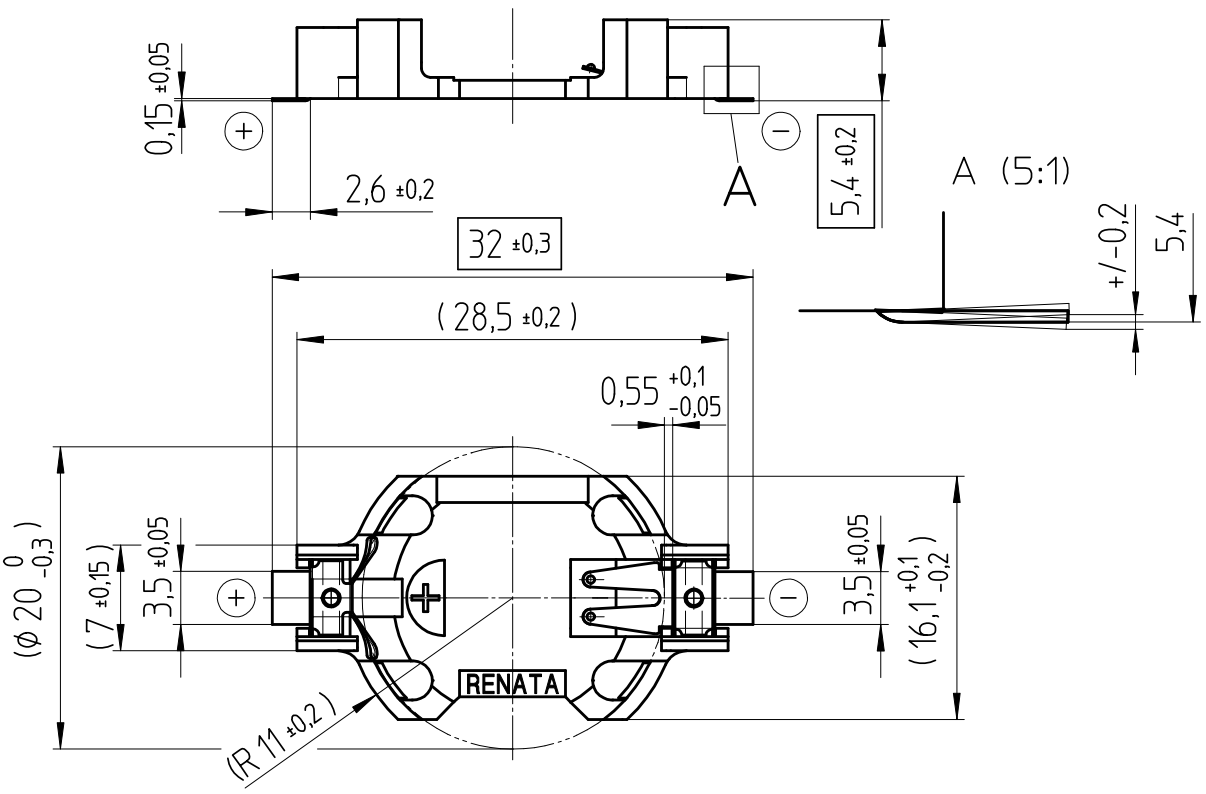

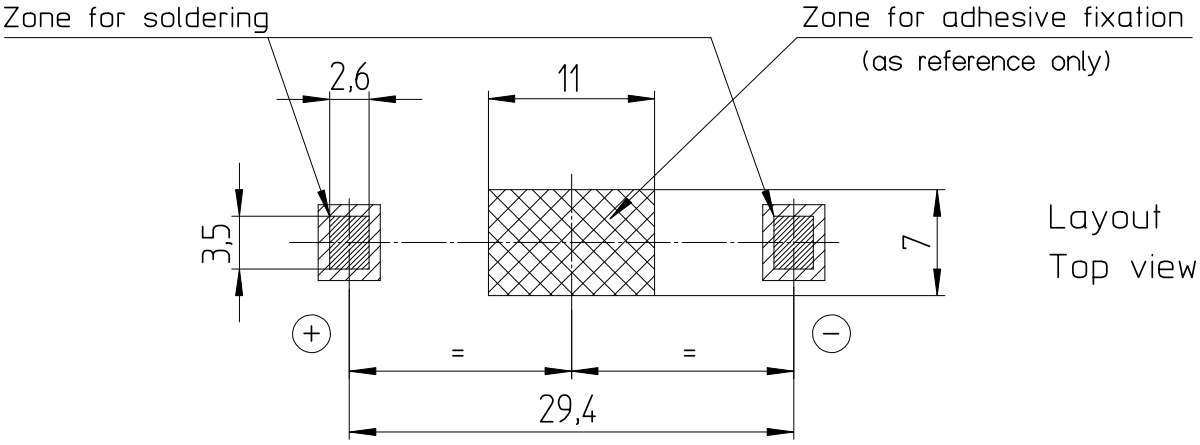

Layout
Top view

- Samples can deviate in the execution from the serie.

- Dimensions and tolerances can be specified only after the testing of the devices for the mass production definitely

Holder material : heat resistant, glass-fiber reinforced LCP

Battery contacts : spring stainless steel 301 nickel plated, thickness 10µm

Solder contacts : spring stainless steel 301 solder plated throughout 100% Sn, thickness 10µm

All framed values will be used for dimension checking !

Rev.	1	06.08.07	SRi	Rev.	4	24.10.07	SRi		Customer's Approval		
Rev.	2	07.09.07	MCi	Rev.	◯				Date		
Rev.	3	26.09.07	SRi	Rev.	◯				Signature		
Titel: SMTU2032-LF								Scale 2:1	Drawn	25.01.05	SRi
									Checked	24.10.07	BBö
									Approved	25.10.07	MHo

renata batteries

CH-4452 Itingen
Switzerland

3.8760.4-4