REV.	DATE	DESCRIPTION
NC	03/18/00	MODIFY CONTACT

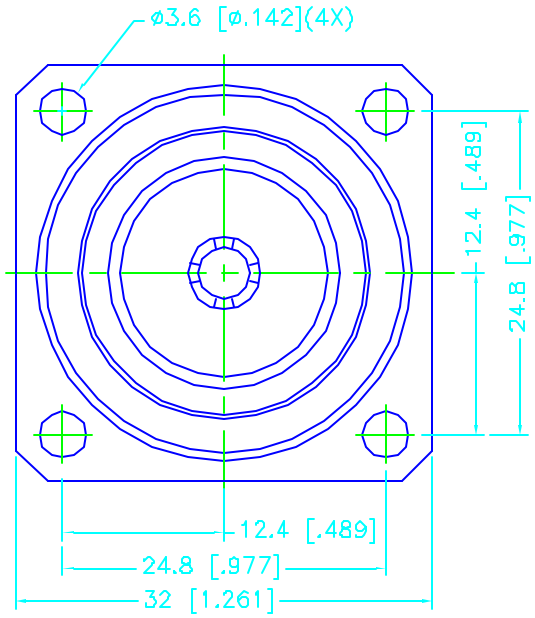

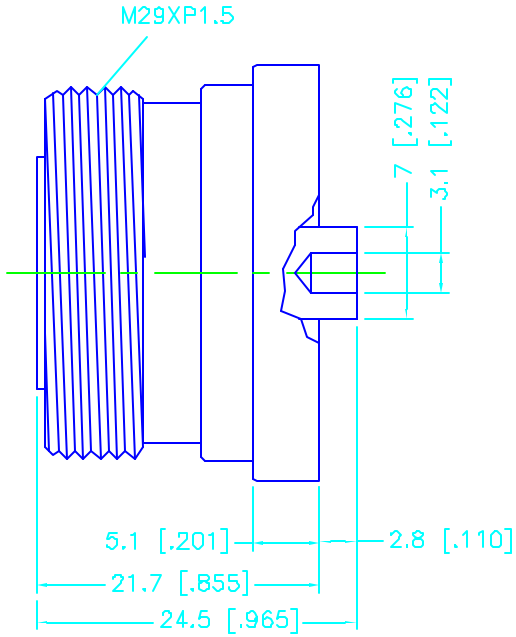

NOTES: FINISH (PLATING THICKNESS IN MICRO-INCHES)

1. SILVER PL. 200 MIN. THICK OVER COPPER STRIKE
2. BRASS PER QQ-B-626
3. BERYLLIUM COPPER PER QQ-C-530.
4. TEFLON MIL-P-19468

	DESCRIPTION	MATERIAL	FINISH
1	BODY	BRASS	SILVER
2	INSULATOR	TEFLON	NATURAL
3	CONTACT PIN	BER. COPPER	SILVER
4	FERRULE	COPPER	SILVER
5	COVER	PE	BLUE
6			
7			
8			

UNLESS OTHERWISE SPECIFIED DIMENSIONS ARE IN MILLIMETERS

DIMENSIONS IN [ ] ARE IN INCHES FOR CUSTOMER REFERANCE ONLY

UNLESS OTHERWISE SPECIFIED TOLERANCES FOR MILLIMETERS ARE:

0.5–6 = ± 0.2
6–30 = ± 0.4
30–120 = ± 0.6
120–315 = ± 1
315–1000 = ± 1.6
1000–2000 = ± 2.4

DO NOT SCALE DRAWING

APPROVALS		DATE
DRAWN	G.R.S.	03/18/00
CHECKED		
ISSUED		

Connector Corporation

TITLE: 7/16 PANEL RECEPTACLE (SOLDER CONTACT)

SIZE	FSCM NO.	DWG. NO.	REV.
A	99001	272130.DWG	A

SCALE	NA	PART NO.	272130	SHEET	1 OF 1