P.1/2

<285 031>

REV	ZONE	LTR	DESCRIPTION	DATE	REVISER	APPD

客户核准

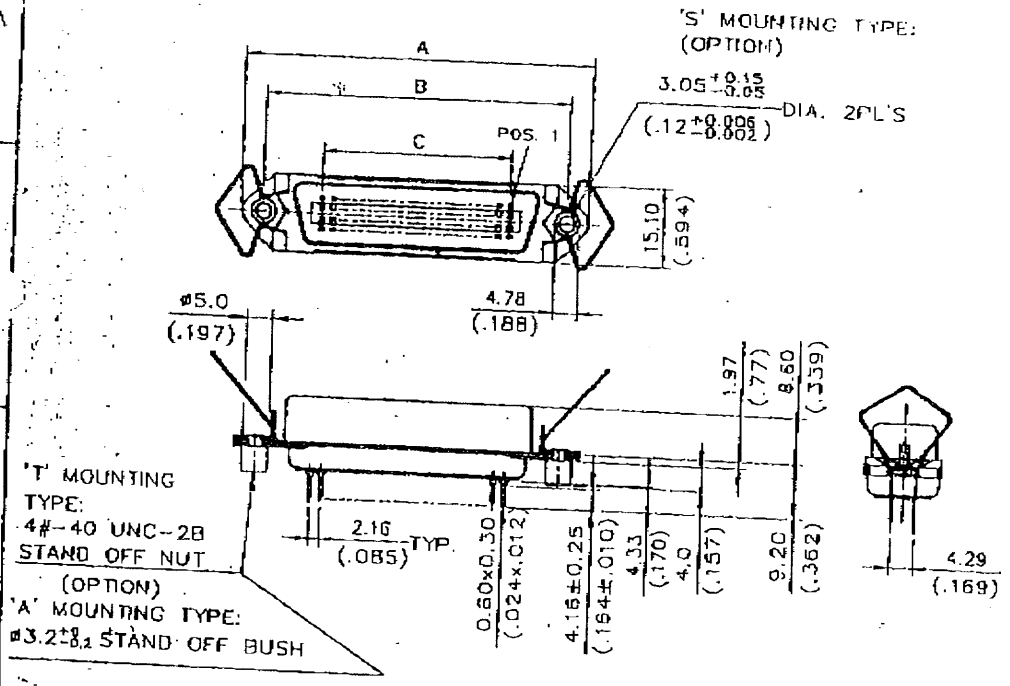

SPECIFICATIONS :
- CURRENT RATING : 3A
- INSULATION RESISTANCE : 1000MΩ min. (500V DC)
- DIELECTRIC WITHSTANDING VOLTAGE : 1200V,FOR ONE MINUTE.
- CONTACT RESISTANCE : 30mΩ max.
- OPERATING TEMPERATURE : -55°C TO 105°C
- INSULATOR : PBT & GLASS-FIBER REINFORCED, UL-94V-0.
- CONTACT : PHOSPHOR BRONZE, GOLD PLATED OVER NICKEL PLATED ON THE CONTACT AREA,TIN/LEAD PLATED ON THE SOLDERTAIL SECTION.
- SHELL : STEEL, NICKEL PLATED.

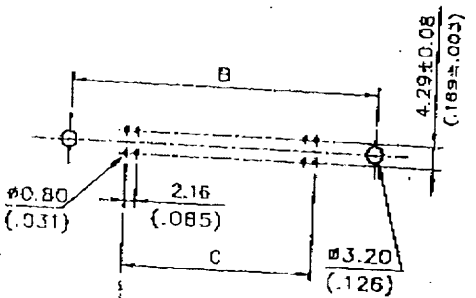

RECOMMENDED P.C.B. LAYOUT

PART NO.

5T	40	360	M	-1	0	N	S
(1)	(2)	(3)	(4)	(5)	(6)	(7)	(8)

(1) SERIES NUMBER :
5T : STRAIGHT P.C.B MOUNTING TYPE RIBBON CONNECTOR

(2) CONTACT & CONNECTING TYPES :
.10 : PLUG, WITHOUT SPRING LATCH
.20 : SOCKET, WITHOUT SPRING LATCH
.40 : SOCKET, WITH SPRING LATCH

(3) NUMBER OF CONTACTS :
.140 : 14 POSITIONS
.240 : 24 POSITIONS
.360 : 36 POSITIONS
.500 : 50 POSITIONS

(4) HOUSING CONSTRUCTION TYPES :
.M : WITH METAL FRONT SHELL

(5) COLOR CODES :
.1 : BLUE
.2 : GRAY
.3 : BLACK

(6) CONTACT FINISH :
.0 : GOLD FLASH OVER NICKEL
.2 : 15μ" GOLD PLATED OVER NICKEL
.3 : 30μ" GOLD PLATED OVER NICKEL

(7) STRAIN RELIEF :
.N : WITHOUT STRAIN RELIEF

(8) MOUNTING TYPES :
.S : STANDARD THRU HOLES
.T : WITH 4#-40UNC STAND OFF NUT
.A : WITH ø3.20 THRU HOLES STAND OFF BUSH

51.84(2.041)	74.85(2.947)	83.30(3.280)	50	5T40500M
36.72(1.446)	59.74(2.352)	68.20(2.685)	36	5T40360M
23.76(0.935)	46.78(1.842)	55.25(2.175)	24	5T40240M
12.96(0.510)	35.99(1.417)	44.45(1.750)	14	5T40140M
C±0.13(.005)	B±0.13(.005)	A±0.36(.014)	NO. OF POSITIONS	PART NO.

MATERIAL

FINISH

TOLERANCE UNSPECIFIED
.000 ±
.00 ± 0.25
.0 ±
ANGLE ±

DRAWN 吴凯翔 8/1/0
DESIGNER
CHECKED

EDA INC.

SCALE 1:1
UNIT mm(inch)

NAME
5T SERIES 40 ...
STRAIGHT P.C.B MOUNTING TYPE
RIBBON CONNECTOR

SHEET 1

147-750