COMMERCIAL AUDIO PRODUCTS

Sub-miniature (2.5mm)

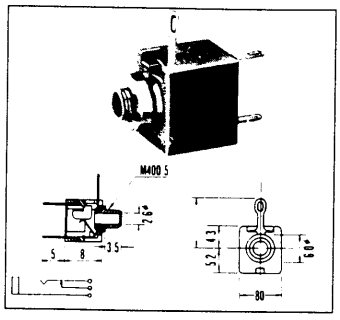

2 pole (mono) socket
chassis mount with switch

MJ-146

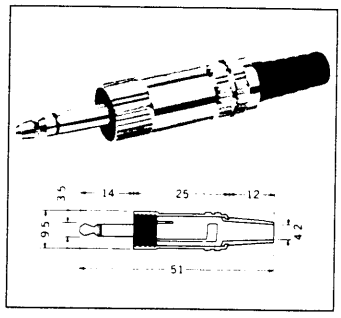

2 pole (mono) plug
screened with cable protector

MP-106LS

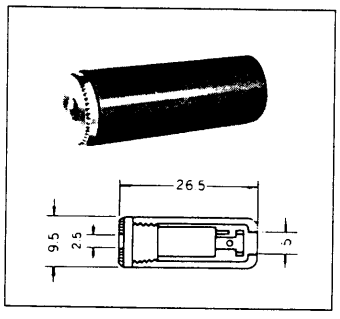

2 pole (mono) socket
in-line unscreened

MJ-165

Loudspeaker Plugs & Sockets

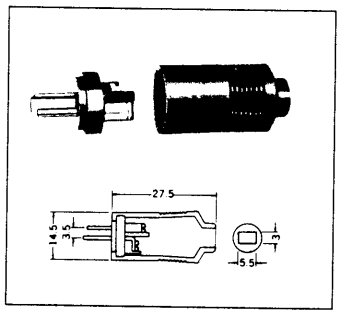

DIN 2 pole plug
solderless

MP-134S

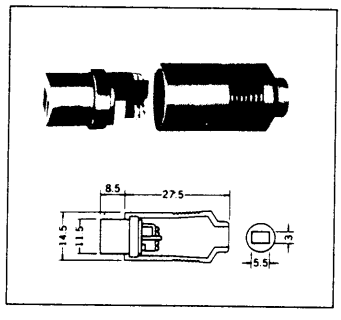

DIN 2 pole in-line socket
solderless

MJ-135S

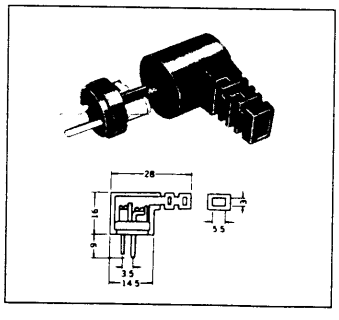

DIN 2 pole right angle plug
solderless with cable protector

MP-134LS

150-851

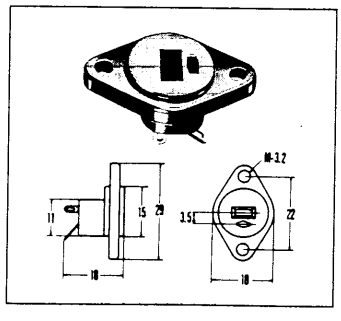

DIN 2 pole socket
chassis mount

MI-731

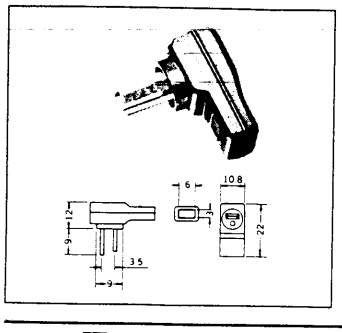

DIN 2 pole right angle mini plug

MP-430L

Fax: 0243 841486 ☎ **0243 866741**