Bernstein
Bernstein AG
Postfach 1164
D-32437 Porta Westfalica

Technical data sheet

ENK-SU1 FF | 608.1190.045

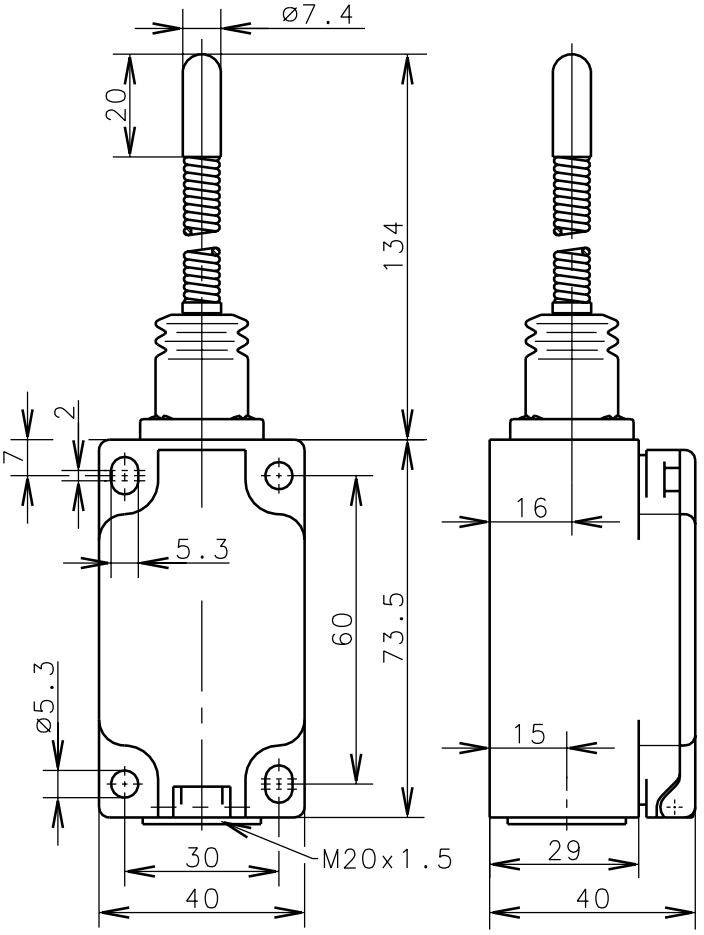

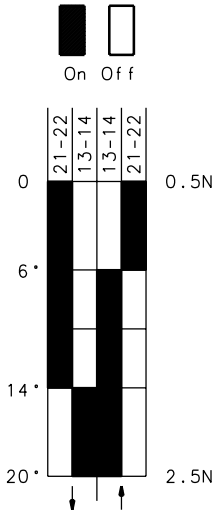

Switching diagram

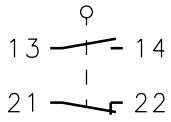

Switching symbol

Tolerance: operating point ±3.5°; actuating force ±10%

Mechanical features

Enclosure:	Thermoplast, glass fibre reinforced
Cover:	Thermoplast, glass fibre reinforced
Actuator:	Wobble stick with plastic slide
Ambient air temperature:	-30°C up to +80°C
Contact type:	1 NC-contact, 1 NO-contact
Mechanical life:	10×10^6 switch operations
Switch frequency:	max. 100/min
Mounting:	4 x M5
Connection type:	4 screw connectors (M3,5)
Cable entry size:	1 x M20x1.5
Weight:	approx. 0,15 kg

Electrical features

Max. Voltage:	500 V AC
Max. enduring current:	I th 10A
Max. inrush current:	according to IEC 947-5-1, AC 15, DC 13
Standards:	according to EN 60204; EN 60947-1; EN 60947-5-1
Protection class (IP-Code):	IP65 according to EN 60529; DIN VDE 0470 T1
CSA:	10A 300V AC, A300 (same polarity)
Short-circuit protection:	Fuse 2A gL/gG, IEC/EN 60947-5-1

Approach possibilities
May be actuated from all directions.

Remarks
The moving parts should be oiled periodically
The planned protection class (IP-Code) is valid only at closed cover and when using an at least equivalent cable gland.

Schutzvermerk nach DIN 34 beachten
Copyright reserved

11.01.2001

Copies are not retreated in case of alternations.