MICRO SWITCH
FREEPORT, ILLINOIS, U.S.A.
A DIVISION OF HONEYWELL

FED. MFG. CODE 91929

ASSEMBLY– PUSHBUTTON SWITCH

CATALOG LISTING
IPB43

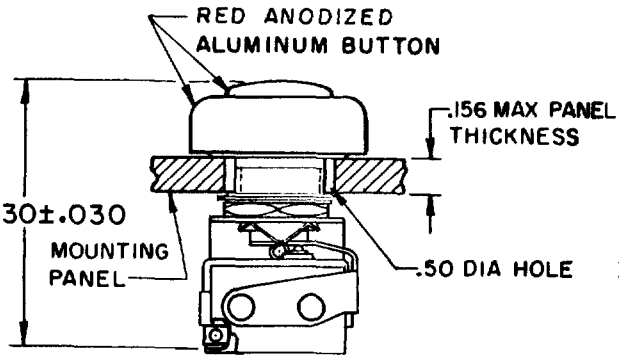

ASSEMBLED DETAIL

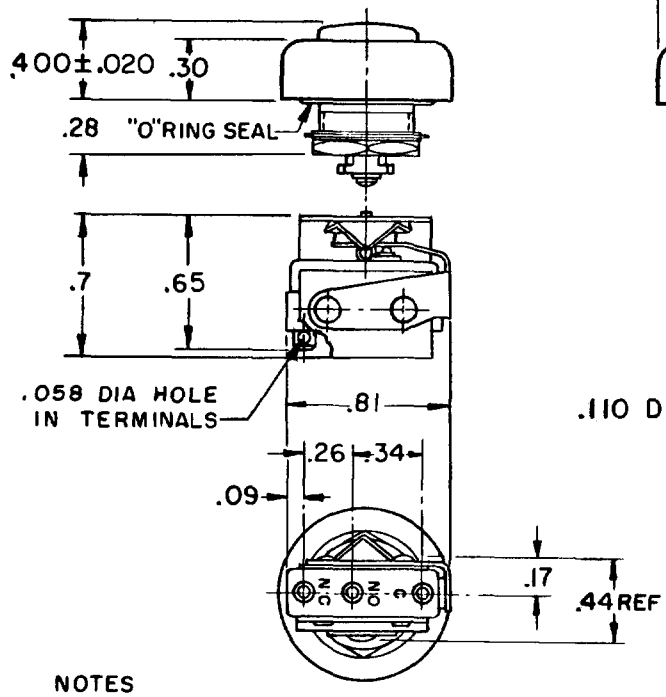

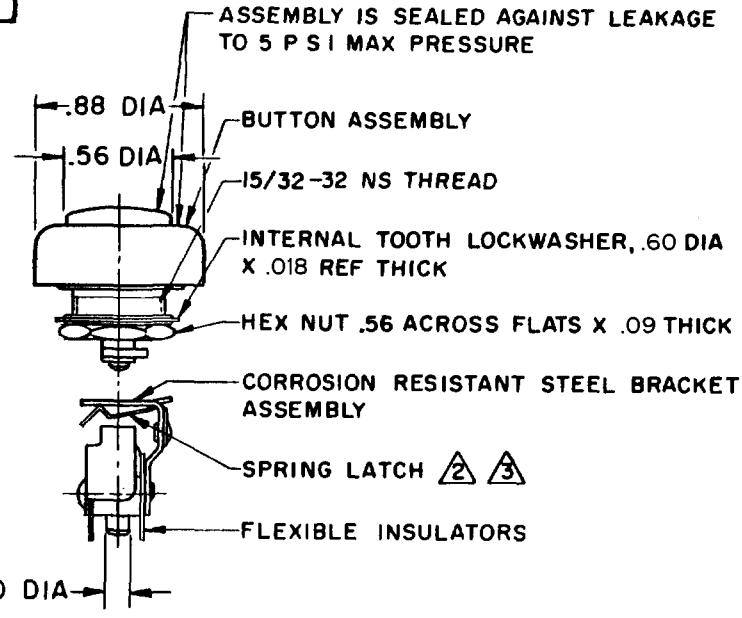

NOTES
1- UNIT INCLUDES CATALOG LISTING "ISM" TYPE BASIC SWITCH
2 SPRING LATCH PERMITS ASSEMBLY AND DISASSEMBLY AS REQUIRED
3 "D" SHAPED HOLE IN SPRING LATCH PREVENTS ROTATION BETWEEN THE TWO PARTS
4- ASSEMBLY IS COMPLETED AFTER INSTALLING BUTTON TO PANEL
5- TERMINALS ARE PLATED FOR SOLDERING

THIS DRAWING COVERS A PROPRIETARY ITEM AND IS THE PROPERTY OF MICRO SWITCH, A DIVISION OF HONEYWELL. THIS DRAWING IS NOT TO BE COPIED OR USED WITHOUT THE APPROVAL OF MICRO SWITCH.

CHARACTERISTICS

OPERATING FORCE — — — 2 LB MAX
PLUNGER TRAVEL — — —.062 APPROX

ELECTRICAL DATA

CONTACT ARRANGEMENT
S P D T

250 VAC — — — — — — — — — — — — 5 AMP
30 VOLTS DC RATING
INDUCTIVE — — — — SEA LEVEL — — — 3 AMP
50,000 FT — — 2.5 AMP
RESISTIVE — — — — SEA LEVEL — — — 5 AMP
50,000 FT — — — 5 AMP
MAXIMUM INRUSH — — — — — — — — 24 AMP

SCALE FULL
DO NOT SCALE PRINT

UNLESS OTHERWISE NOTED
DIMENSIONS ARE IN INCHES
TOLERANCES ARE:

ONE PLACE	(.0)	±.030
TWO PLACE	(.00)	±.015
THREE PLACE	(.000)	±.005
ANGLES		±

WEIGHT

IPB43 PAGE 1 OF 1
REPLACES
RELEASE NO. M
DRAWING NUMBER 8
ISSUE
CHECK

REVISIONS
A CO19743 M B F 30 MAR 64
B CO 20470 M B F 2 SEP 65
C C095143 D L T 14 JUL 99

CHECK
CHECK 8 APR 65 L S D
CHECK 30 MAR 65 M B F
DRAWN
FORMTEK
FO-50376