OPTION G

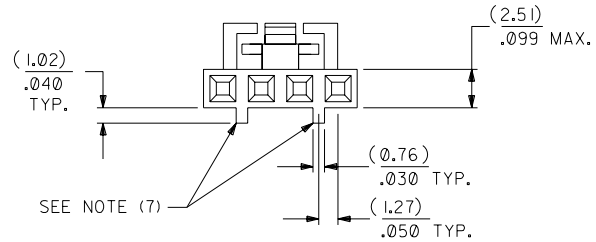

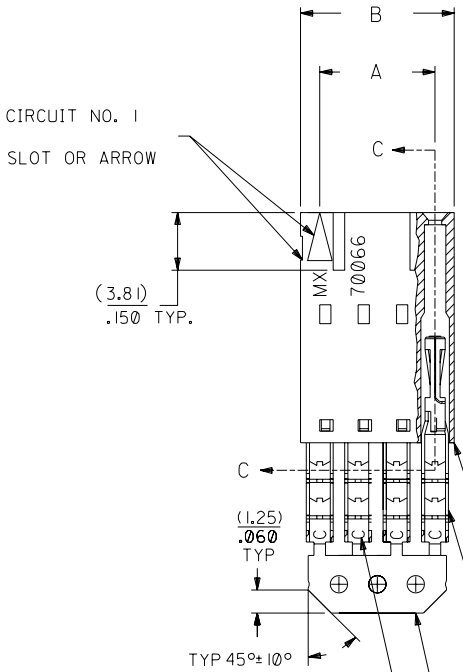

NOTES:

1) TO BE USED WITH (28) AWG. STRANDED WIRE WITH (1.35)/.053 DIA. MAX. INSULATION.
2) SEE CHART FOR CIRCUIT SIZES.
3) STANDARD PACKAGING PER PK-70873-0001. OPTIONAL PACKAGING MAY BE AVAILABLE, REQUEST DWG. PK-70400
4) PARTS STACKABLE END TO END ON (2.54)/.100 CENTERS.
5) REFER TO PRODUCT SPECIFICATION: PS-70400.
6) SEE DWG. SDA-70400-**** (SHT. 5) FOR OPTIONAL HOUSING DETAILS.
7) 4 CIRCUIT SHOWN. 4 - 25 CKT'S. HAVE (2) RIBS.
8) TO MATE WITH MOLEX PART NO'S.: A-70373-****, A-70375-****, A-70389-****, A-70391-****, 70107-****, 70018-****, A-70543-****, A-70553-****, A-70541-****, A-70551-****, A-70545-****, A-70555-****.
9) 2 CIRCUIT ASSEMBLIES SUPPLIED AS GROUPED PAIRS.

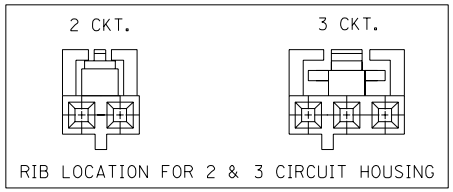

SECTION C-C

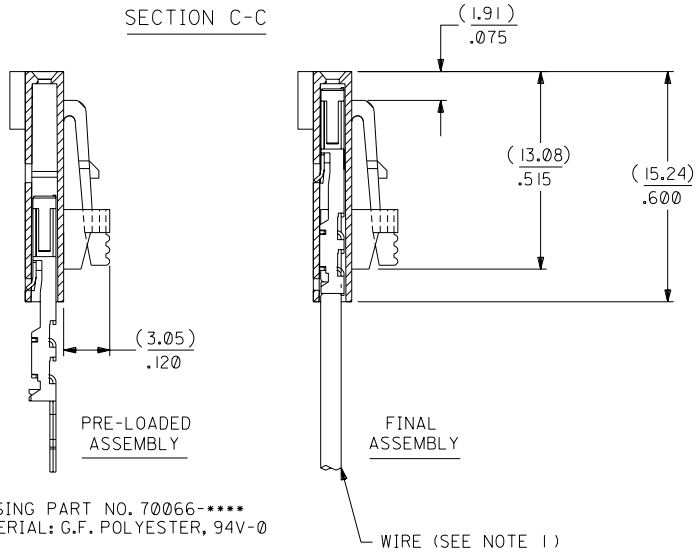

CKT. SIZE	A	B	EDP. NO.	ENG. NO.
2	(2.54) .100	(5.05) .199	14-60-0026	A-70400-0491
3	(5.08) .200	(7.59) .299	14-60-0036	A-70400-0492
4	(7.62) .300	(10.13) .399	14-60-0046	A-70400-0493
5	(10.16) .400	(12.67) .499	14-60-0056	A-70400-0494
6	(12.70) .500	(15.21) .599	14-60-0066	A-70400-0495
7	(15.24) .600	(17.75) .699	14-60-0076	A-70400-0496
8	(17.78) .700	(20.29) .799	14-60-0086	A-70400-0497
9	(20.32) .800	(22.83) .899	14-60-0096	A-70400-0498
10	(22.86) .900	(25.37) .999	14-60-0106	A-70400-0499
11	(25.54) 1.000	(27.91) 1.099	14-60-0116	A-70400-0500
12	(27.94) 1.100	(30.45) 1.199	14-60-0126	A-70400-0501
13	(30.48) 1.200	(32.99) 1.299	14-60-0136	A-70400-0502
14	(33.02) 1.300	(35.53) 1.399	14-60-0146	A-70400-0503
15	(35.56) 1.400	(38.07) 1.499	14-60-0156	A-70400-0504
16	(38.01) 1.500	(40.61) 1.599	14-60-0166	A-70400-0505
17	(40.64) 1.600	(43.15) 1.699	14-60-0176	A-70400-0506
18	(43.18) 1.700	(45.69) 1.799	14-60-0186	A-70400-0507
19	(45.72) 1.800	(48.23) 1.899	14-60-0196	A-70400-0508
20	(48.26) 1.900	(50.77) 1.999	14-60-0206	A-70400-0509
21	(50.80) 2.000	(53.31) 2.099	14-60-0216	A-70400-0510
22	(53.34) 2.100	(55.85) 2.199	14-60-0226	A-70400-0511
23	(55.88) 2.200	(58.39) 2.299	14-60-0236	A-70400-0512
24	(58.42) 2.300	(60.93) 2.399	14-60-0246	A-70400-0513
25	(60.96) 2.400	(63.47) 2.499	14-60-0256	A-70400-0514

70400

HOUSING PART NO. 70066-****
MATERIAL: G.F. POLYESTER, 94V-0

TERMINAL PART NO. 70028-****
MATERIAL: PHOSPHOR BRONZE
PLATING PER ES-88-***

TIN - .000150 MIN. TIN OVER
.000050 MIN. NICKEL PLATE.

I.D. SLOT CODE TO WIRE GAUGE CHART	
I.D. SLOT CODE	WIRE GAUGE
C	28 AWG.

PLATING CODE (STRIPE ON CARRIER STRIP)	
PLATING	COLOR
TIN	NONE

*THE PRIMARY SHIPPING CARTON WILL BE LABELED "COMPLIANT TO RoHS DIRECTIVE 2002/95/EC AND ELV ANNEX II OF DIRECTIVE 2000/53/EC". CARTONS WITHOUT THIS LABEL MAY CONTAIN PRODUCT WITH LEAD.

LTR.	REVISIONS	LTR.	REVISIONS
		H1	ADD CARRIER CHAMF ECN #UDT1998-0280 05/20/98 LMCGRATH
		H	164 PLATING WAS 102 PER ECR # U30941 07/14/93 REED
I	LEAD FREE UCP2004-1769 RWHITE 04/03/17	G	REVISED PER ECR# U00049 9-26-90 MGB

DIMENSIONS SHOWN (METRIC) INCH
UNLESS OTHERWISE SPECIFIED TOLERANCES: ANGULAR ± 1/2°

	INCH	METRIC
3 PLACE	± .010	---
2 PLACE	± .014	± 0.25
1 PLACE	---	± 0.35

DRAFT WHERE APPLICABLE MUST REMAIN WITHIN DIMENSIONS

DRWG. BY W.Z | CHK'D. BY W.Z | APP'D. BY | SCALE 4 : 1

MFG. SH. REV.

▽ = 0 ▼ = 0 REVISE ONLY ON CAD SYSTEM

TITLE ASSEMBLY, SL CONNECTOR (SINGLE ROW- (2.54)/.100 GRID)

molex MOLEX INCORPORATED LISLE, ILL. 60532 U.S.A.

SHEET NO. | DATE 10/09/84

PART NO. SEE CHART | DRWG. NO. SDA-70400-0491-0514

FILE NAME S70400GX3

THIS DRAWING CONTAINS INFORMATION THAT IS PROPRIETARY TO MOLEX INC. AND SHOULD NOT BE USED WITHOUT WRITTEN PERMISSION.

DIV. DA | SIZE C