5

MICRO SWITCH
FREEPORT ILLINOIS, U.S.A
A DIVISION OF HONEYWELL
FED. MFG. CODE 91929

SWITCH-BASIC

CATALOG LISTING
BZ-R2411-A4

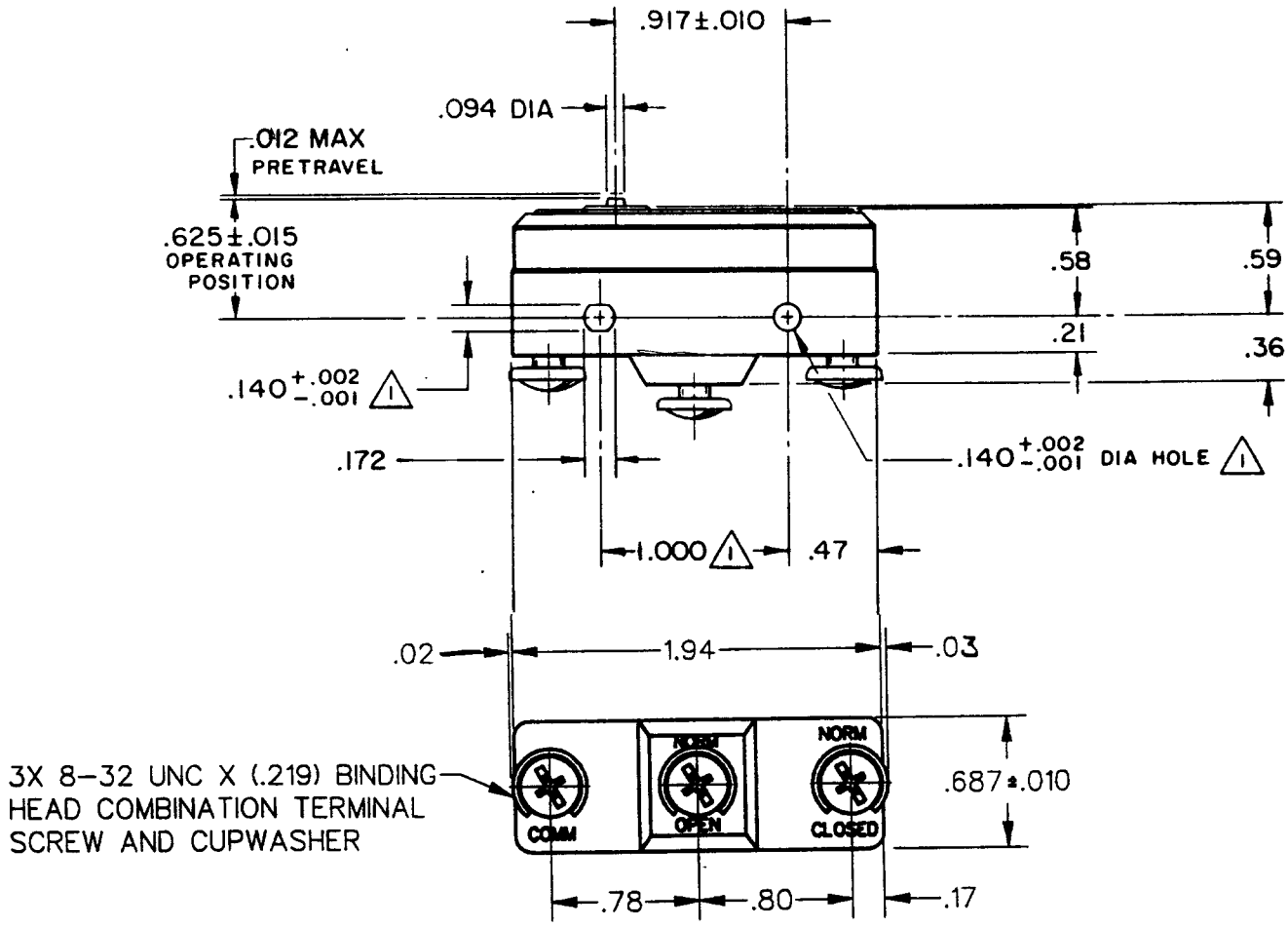

NOTE-
1. MOUNTING HOLES WILL ACCEPT PINS OR SCREWS OF .139 MAX DIA ON 1.000±.002 CENTERS
2 - SWITCH WILL WITHSTAND TEMPERATURE OF 250°F

THIS DRAWING COVERS A PROPRIETARY ITEM AND IS THE PROPERTY OF MICRO SWITCH, A DIVISION OF HONEYWELL. THIS DRAWING IS NOT TO BE COPIED OR USED WITHOUT THE APPROVAL OF MICRO SWITCH.

CHARACTERISTICS

OPERATING FORCE ---------- 7-9 OZ
RELEASE FORCE ---------- 4 OZ MIN
DIFFERENTIAL TRAVEL --- .0003-.0005
OVERTRAVEL ---------- .005 MIN

ELECTRICAL DATA

CONTACT ARRANGEMENT
S P D T

UNDERWRITERS' LAB. INC. LISTED RATING
-L103- 15A-125, 250 OR 480 VAC
1/8HP-125 VAC; 1/4HP-250 VAC

SCALE FULL
DO NOT SCALE PRINT

UNLESS OTHERWISE NOTED
DIMENSIONS ARE IN INCHES
TOLERANCES ARE

ONE PLACE	(.0)	±.030
TWO PLACE	(.00)	±.015
THREE PLACE	(.000)	±.005
ANGLES		±

WEIGHT .060 LB

-L310-

BZ-R2411-A4
M
DRAWING NUMBER
RELEASE NO. PR-3220
REPLACES
ISSUE X 4 3
CHECK
REVISIONS
A CO-73287-G J A L 20 OCT 93
B CO-79599F J J A 24 FEB 95
C 0033747 MST 12SEP07
12SEP07 PSR
CHECK
23 MAR 73 LSD
CHECK
73 MAR 16 SRH
DRAWN
RASTER
FO-52848