MICRO SWITCH
FREEPORT, ILLINOIS, U.S.A.
A DIVISION OF HONEYWELL

FED. MFG. CODE 91929

SWITCH - BASIC

CATALOG LISTING
BZ-2RDT

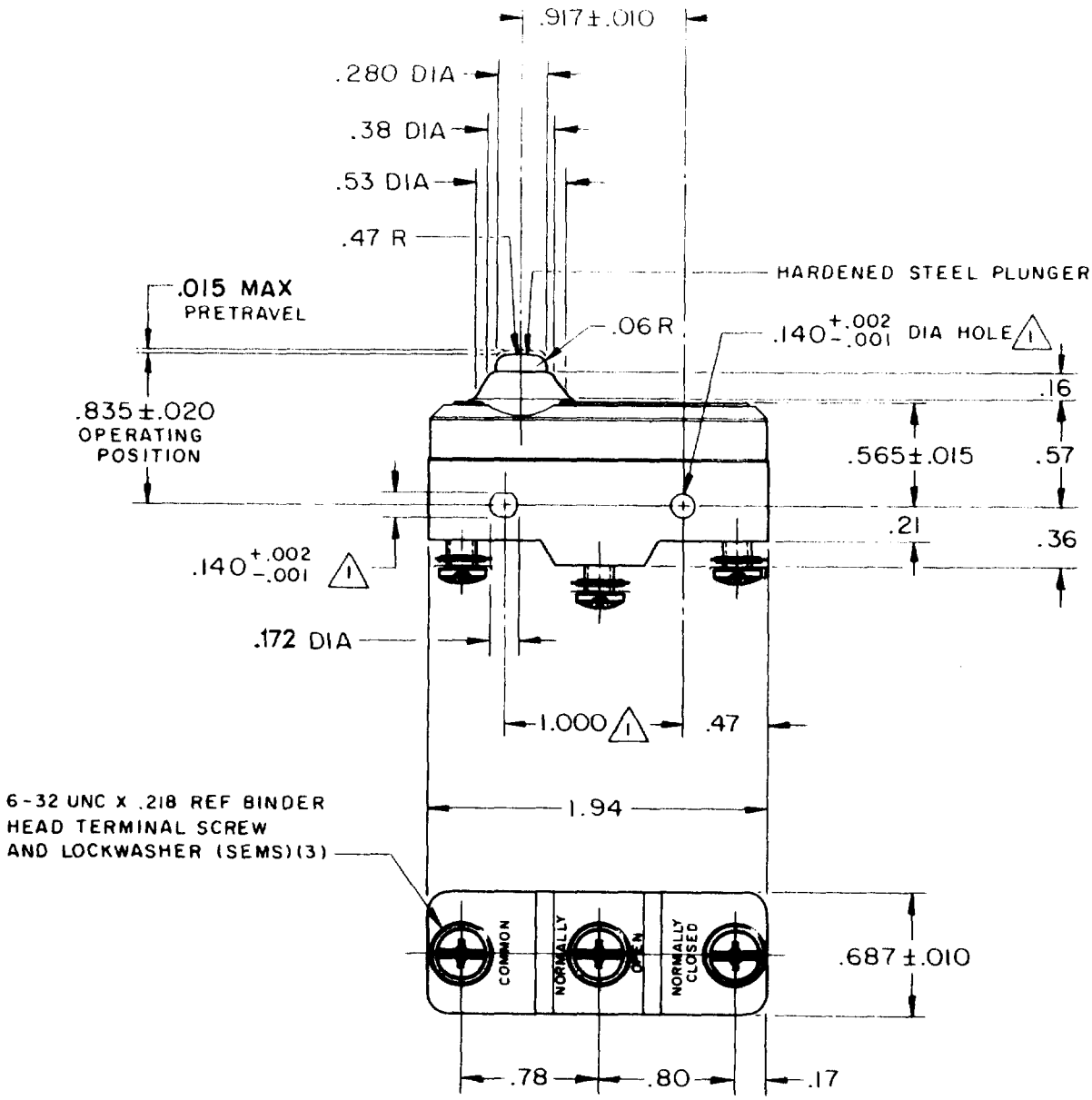

NOTE
1. MOUNTING HOLES WILL ACCEPT PINS OR SCREWS OF .139 MAX DIA ON 1.000±.002 CENTERS

THIS DRAWING COVERS A PROPRIETARY ITEM AND IS THE PROPERTY OF MICRO SWITCH, A DIVISION OF MINNEAPOLIS-HONEYWELL REGULATOR CO. THIS DRAWING IS NOT TO BE COPIED OR USED WITHOUT THE APPROVAL OF MICRO SWITCH.

CHARACTERISTICS

OPERATING FORCE ---------- 9 - 13 OZ

RELEASE FORCE ---------- 4 OZ MIN

DIFFERENTIAL TRAVEL ---- .0004 - .0020

OVERTRAVEL ---------- .060 MIN

ELECTRICAL DATA

CONTACT ARRANGEMENT
S P D T

UNDERWRITERS' LAB. INC. LISTED RATING

-L96- 15 A - 125, 250, OR 480 VAC
1/2 A - 125 VDC; 1/4 A - 250 VDC
1/8 HP - 125 VAC, 1/4 HP - 250 VAC

-L288-
-L299-
-L306-
16A 250V ~ T85 5E4

SCALE FULL

DO NOT SCALE PRINT

UNLESS OTHERWISE NOTED
DIMENSIONS ARE IN INCHES

TOLERANCES ARE:

ONE PLACE	(.0)	±.030
TWO PLACE	(.00)	±.015
THREE PLACE	(.000)	±.005
ANGLES		±

WEIGHT .064 LB

M BZ-2RDT PAGE 1 OF 1

DRAWING NUMBER

ISSUE 13

REPLACES

RELEASE NO.

CHECK

REVISIONS

A	CO 17410	G C H 14 MAY 63
B	CO-89351-D	JWB 18 JUL 91
C	CO-77589	K D R 29 MAR 94
D	C093346	D L T 8 SEP 98

CHECK

L.S.D 17 JUN 63

CHECK

DRAWN G C H 14 MAY 63

FORMTEK
FO-50378