MICRO SWITCH
FREEPORT, ILLINOIS U S A
A DIVISION OF HONEYWELL
FED. MFG. CODE 91929

SWITCH – ENCLOSED

CATALOG LISTING
BZE6-RQ8X2

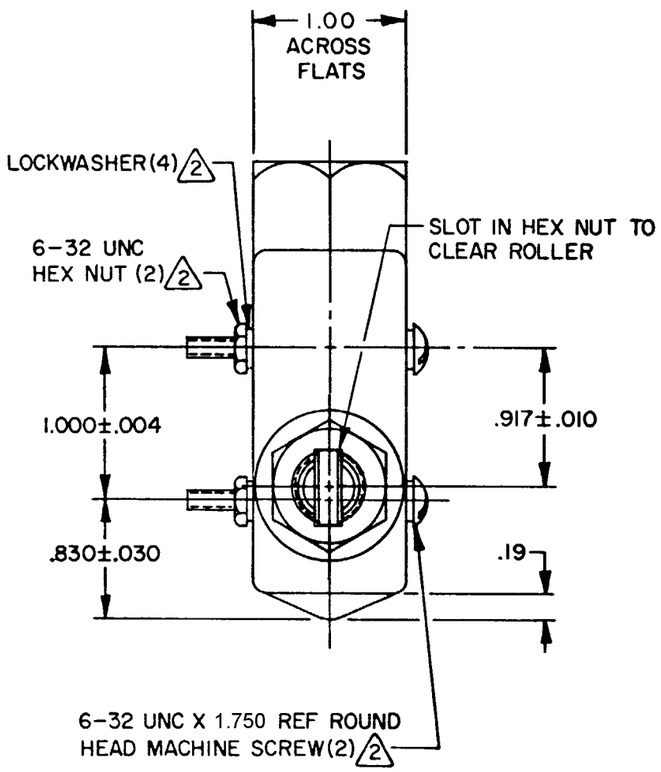

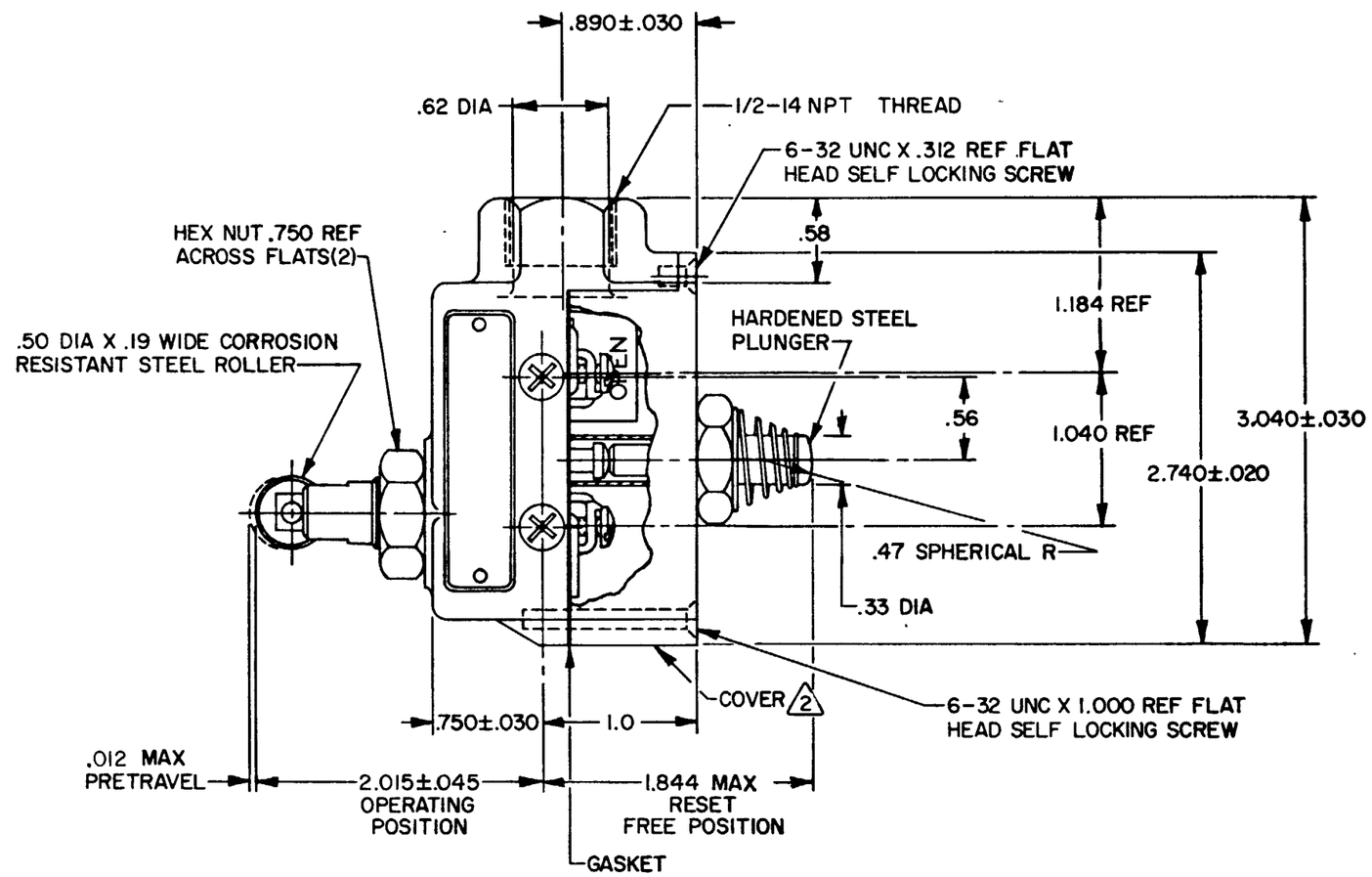

NOTES–

1 – 6-32 UNC X .218 REF BINDING HEAD TERMINAL SCREW (3)
2 FURNISHED UNASSEMBLED
3 - SEAL RATING: NEMA 1
IP40

THIS DRAWING COVERS A PROPRIETARY ITEM AND IS THE PROPERTY OF MICRO SWITCH A DIVISION OF HONEYWELL THIS DRAWING IS NOT TO BE COPIED OR USED WITHOUT THE APPROVAL OF MICRO SWITCH.

CHARACTERISTICS	ELECTRICAL DATA	SCALE FULL
OPERATING FORCE ------ 6-9 1/2 OZ	CONTACT ARRANGEMENT	DO NOT SCALE PRINT
OVERTRAVEL ---------- .140 MIN	S P D T MAINTAINED CONTACT	UNLESS OTHERWISE NOTED
RESET CHARACTERISTICS	CODE L67 15A-125, 250 OR 480 VAC 1/4HP-125 VAC; 1/2HP-250 VAC 1/2A-125 VDC; 1/4A-250 VDC	DIMENSIONS ARE IN INCHES
OPERATING FORCE ------- 8 OZ MIN	CE 1.5A, 240 Vac	TOLERANCES ARE:
BASIC SWITCH REPLACEMENT -- BZ-RQX784		WEIGHT

ONE PLACE	(.0)	±.030
TWO PLACE	(.00)	±.015
THREE PLACE	(.000)	±.005
ANGLES		±

BZE6-RQ8X2 M

ISSUE	DRAWING NUMBER	RELEASE NO.	REPLACES
9	29AUG07		

CHECK	DRAWN
PSR	J A L 29 AUG 77

REVISIONS

A	C038200	J A L 29 AUG 77
B	C053191F	TSK 13 APR 84
C	C055989	CJH 8 NOV 84
D	C054958	TSK 26 FEB 85
E	C072618	LJF 14 SEP 92
F	0016894	KRB 10 NOV 05
G	0033014	BS 29AUG07

RASTER FO-5265-1-A