NOTES:

1. MATERIAL
   HOUSING: POLYESTER, GLASS FILLED, BLACK.
   FRONT SHELL: CARBON STEEL.
   CONTACTS AND EYELETS: BRASS.
   BOARDLOCKS: COPPER ALLOY
   THREADED INSERTS: ZINC.
2. FINISH
   FRONT SHELL: 2.54um [.000100] MIN. TIN OVER 1.27um [.000050] MIN. COPPER
   CONTACTS: 0.76um [.000030] MIN. GOLD FOR A LENGTH OF 3.81 [.150] MIN. FROM MATING END. 2.54um [.000100] MIN. TIN FOR A LENGTH OF 3.56 [.140] MIN. FROM OPPOSITE END. BOTH OVER 1.27um [.000050] MIN. NICKEL.
   BOARDLOCKS: 3.81um [.000150] MIN. TIN-LEAD OVER 1.27um [.000050] MIN. NICKEL.
   EYELETS: 5.08um [.000200] MIN. TIN OVER COPPER FLASH.
   THREADED INSERTS: CLEAR CHROMATE.
3. SCI, PART NO. AND DATE CODE MARKED APPROX. WHERE SHOWN.
4. DATUMS AND DIMENSIONS TO BE DETERMINED BY CUSTOMER.
5. ELECTRICAL SPECIFICATIONS:
   CAPACITANCE: 820pF±30%
   dF: LESS THAN 10%
   I.R. : 500 MEGOHMS MIN. @ 100V
   DWV: 250V, 5 SECONDS

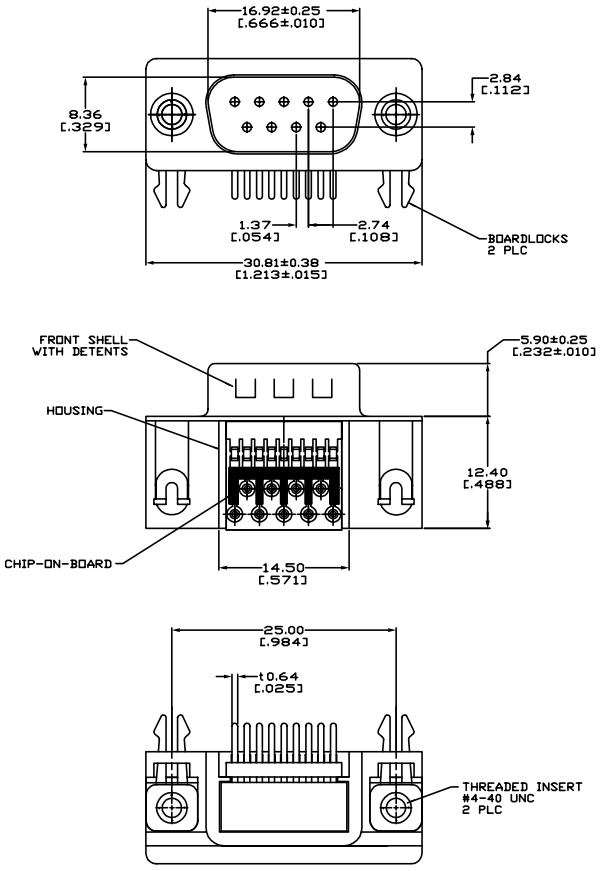

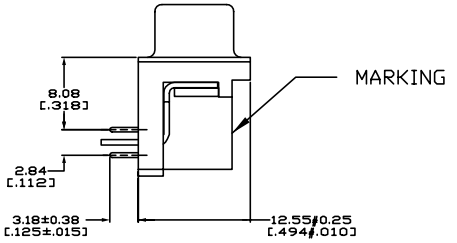

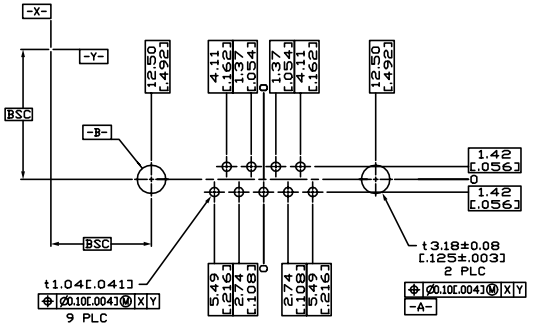

P.C. BOARD MOUNTING DIMENSIONS

REV. NO.		
2	CN 203846	CHANGE NOTICE
1	CN 99191	
0	CN 99162	

UNLESS OTHERWISE SPECIFIED DIMENSIONS ARE IN INCHES.

DO NOT SCALE.

TOLERANCES UNLESS OTHERWISE SPECIFIED
Fractions ± 1/64
Dec. .xx± .02
Dec. .xxx± .005
Angles ±0° 30'

CODE IDENT. NO. OLSP2

SPECTRUM CONTROL INC.

ERIE, FAIRVIEW PENNSYLVANIA

Dwn. KAUFFMAN

DATE 9/26/01

Description C.O.B. FILTERED 9 POS. PLUG ASSEMBLY

Sheet 1 of 1

56-102-005

Quality Products From The Specialists In Electro-Magnetic Compatibility