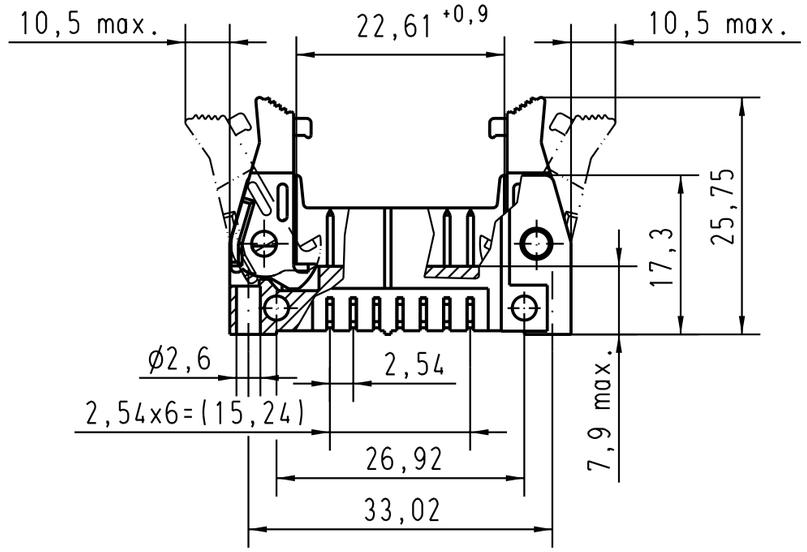

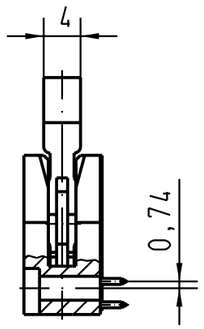

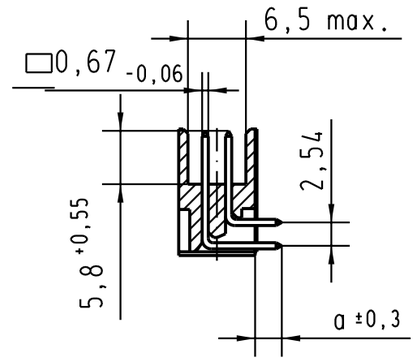

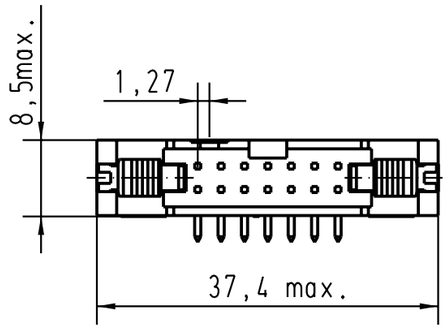

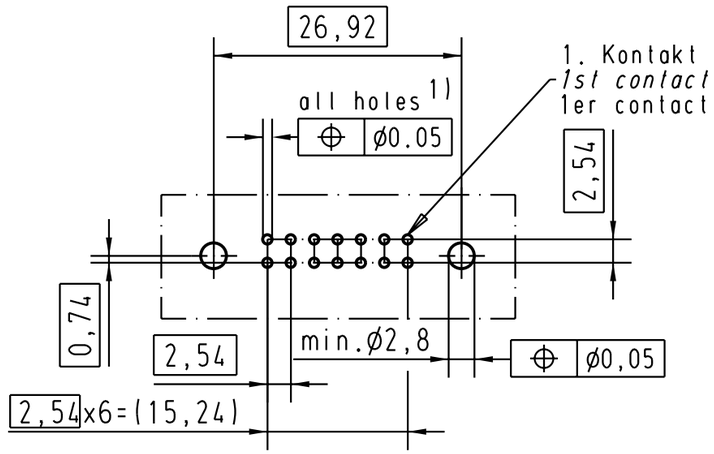

Printed Board Layout
Component side

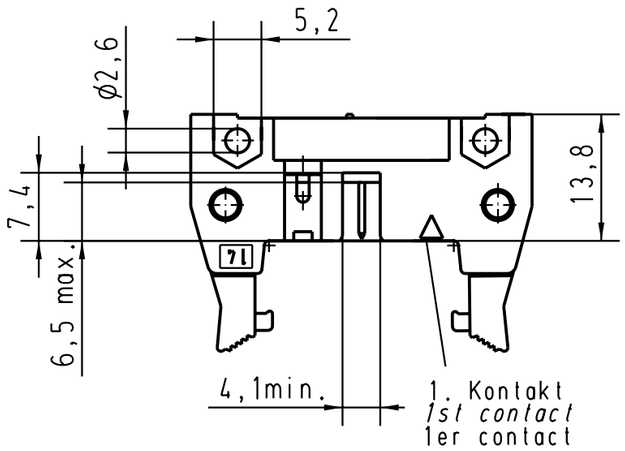

1) Einlötstifte passend für Lochungen
ø1 ±0.1 nach IEC 60326-3
Solder pins for PCB connections
ø1 ±0.1 as per IEC 60326-3
A souder pour des trous de ø1 ±0.1
selon IEC 60326-3

09195147901	3	4.5				
09195146901	2	4.5				
09195145901	0,76 µm Au	4.5				
09195147903	3	2.9				
09195146903	2	2.9				
09195145903	0,76 µm Au	2.9		29778	25-APR-02	CV
Part-No.	*performence level*	*a*		Mod.	Dat.	Name

	Dat.	Name
Detail.	25-APR-02	CV
Insp.		
Stand.		

All Dim. in mm
Orig. Size DIN A 3

HARTING EURL
F-95972 Paris

SEK 19 Male Connector Standard
14 poles
High temperature with angled pins
Long locking levers

Maßstab/ *Scale* 1.5:1

TB 0919514x90x

Sub.

Blatt/ *Page* 1/2

Alle Rechte vorbehalten/ *All rights reserved*