ADSP-21489 EZ-Board™ Evaluation System Manual

Revision 1.0, April 2010

Part Number
82-000228-01

Analog Devices, Inc.
One Technology Way
Norwood, Mass. 02062-9106

ANALOG DEVICES

Copyright Information

© 2010 Analog Devices, Inc., ALL RIGHTS RESERVED. This document may not be reproduced in any form without prior, express written consent from Analog Devices, Inc.

Printed in the USA.

Disclaimer

Analog Devices, Inc. reserves the right to change this product without prior notice. Information furnished by Analog Devices is believed to be accurate and reliable. However, no responsibility is assumed by Analog Devices for its use; nor for any infringement of patents or other rights of third parties which may result from its use. No license is granted by implication or otherwise under the patent rights of Analog Devices, Inc.

Trademark and Service Mark Notice

The Analog Devices logo, VisualDSP++, SHARC, EZ-KIT Lite, and EZ-Extender are registered trademarks of Analog Devices, Inc.

EZ-Board is a trademark of Analog Devices, Inc.

All other brand and product names are trademarks or service marks of their respective owners.

Regulatory Compliance

The ADSP-21489 EZ-Board is designed to be used solely in a laboratory environment. The board is not intended for use as a consumer end product or as a portion of a consumer end product. The board is an open system design which does not include a shielded enclosure and therefore may cause interference to other electrical devices in close proximity. This board should not be used in or near any medical equipment or RF devices.

The ADSP-21489 EZ-Board is currently being processed for certification that it complies with the essential requirements of the European EMC directive 89/336/EEC amended by 93/68/EEC and therefore carries the "CE" mark.

CE

The EZ-Board evaluation system contains ESD (electrostatic discharge) sensitive devices. Electrostatic charges readily accumulate on the human body and equipment and can discharge without detection. Permanent damage may occur on devices subjected to high-energy discharges. Proper ESD precautions are recommended to avoid performance degradation or loss of functionality. Store unused EZ-Boards in the protective shipping package.

CONTENTS

PREFACE

Product Overview viii
Purpose of This Manual xi
Intended Audience xi
Manual Contents xii
What's New in This Manual xii
Technical or Customer Support xiii
Supported Processors xiii
Product Information xiv
Analog Devices Web Site xiv
VisualDSP++ Online Documentation xiv
Technical Library CD xv
EngineerZone xvi
Social Networking Web Sites xvi
Related Documents xvi
Notation Conventions xviii

USING ADSP-21489 EZ-BOARD

Package Contents 1-2

Default Configuration 1-3
EZ-Board Installation 1-5
EZ-Board Session Startup 1-6
Evaluation License Restrictions 1-8
Memory Map 1-8
SDRAM Interface 1-10
SRAM Interface 1-10
Parallel Flash Memory Interface 1-11
SPI Interface 1-12
Watch Dog Timer Interface 1-12
Temperature Sensor Interface 1-13
S/PDIF Interface 1-14
Audio Interface 1-15
UART Interface 1-17
LEDs and Push Buttons 1-17
JTAG Interface 1-19
Expansion Interface II 1-20
Power Measurements 1-21
Power-On-Self Test 1-22
Example Programs 1-22
Background Telemetry Channel 1-22
Reference Design Information 1-23

ADSP-21489 EZ-BOARD HARDWARE REFERENCE

System Architecture 2-2

DAI Interface 2-3
DPI Interface 2-4
Flags and Memory Selects 2-6
Push Buttons and Switches 2-7
DAI [1–8] Enable Switch (SW1) 2-8
DAI [9–16] Enable Switch (SW2) 2-8
DPI [1–8] Enable Switch (SW3) 2-9
Boot Mode Select Switch (SW4) 2-10
DSP Clock Configuration Switch (SW5) 2-10
DAI [17–20] Enable Switch (SW7) 2-11
Programmable Flag Push Buttons (SW8–11) 2-12
Reset Push Button (SW12) 2-12
External Port Enable Switch (SW13) 2-12
DPI [9–14] Enable Switch (SW14) 2-13
Audio In1 Left Selection Switch (SW15) 2-14
Audio In1 Right Selection Switch (SW16) 2-14
Audio In2 Right Selection Switch (SW17) 2-15
Audio In2 Left Selection Switch (SW18) 2-16
JTAG Switches (SW19–22) 2-16
Headphone Enable Switch (SW23) 2-18
Audio Loopback Switches (SW24–25) 2-18
Jumpers 2-19
Flash WP Jumper (JP1) 2-20
S/PDIF Loopback Jumper (JP2) 2-20

UART RTS/CTS Jumper (JP3) 2-20
UART Loopback Jumper (JP4) 2-20
DSP Audio Oscillator Jumper (JP5) 2-20
LEDs 2-21
GPIO LEDs (LED1–8) 2-22
Power LED (LED9) 2-22
Reset LED (LED10) 2-22
Thermal Limit LED (LED11) 2-23
Connectors 2-24
Expansion Interface II Connector (J1) 2-25
RS-232 Connector (J2) 2-25
MP JTAG Connector (J3) 2-25
RCA Audio Connector (J4) 2-26
RCA Audio Connector (J5) 2-26
S/PDIF In Connector (J6) 2-26
S/PDIF Out Connector (J7) 2-26
Headphone Out Connector (J8) 2-27
JTAG Connector (P1) 2-27
Expansion Interface II Connector (P2) 2-27
Differential In/Out Connectors (P8–9) 2-28
MP JTAG Out Connector (P12) 2-28
VDDINT Power Connector (P14) 2-28
VDDEXT Power Connector (P15) 2-29
Power Connector (P16) 2-29

Standalone Debug Agent Connector (ZP1) 2-29

ADSP-21489 EZ-BOARD BILL OF MATERIALS

ADSP-21489 EZ-BOARD SCHEMATIC

Title Page B-1
Processor - External Port B-2
Memory - Parallel B-3
Processor - DAI, DPI Interfaces B-4
Processor - Power, CLKIN B-5
S/PDIF, RS-232, JTAG Interfaces B-6
Reset Circuit, Push Buttons, LEDs B-7
Audio Page 1 ..... B-8
Audio Page 2 ..... B-9
Audio Page 3 ..... B-10
Audio Page 4 ..... B-11
Audio Page 5 ..... B-12
Audio Page 6 ..... B-13
Audio Page 7 ..... B-14
Expansion II Interface B-15
Power B-16

INDEX

Contents

PREFACE

Thank you for purchasing the ADSP-21489 EZ-Board™, Analog Devices, Inc. evaluation system for SHARC® processors.

SHARC processors are based on a 32-bit super Harvard architecture that includes a unique memory architecture comprised of two large on-chip, dual-ported SRAM blocks coupled with a sophisticated IO processor, which gives a SHARC processor the bandwidth for sustained high-speed computations. SHARC processors represents today's de facto standard for floating-point processing, targeted toward premium audio applications.

The evaluation board is designed to be used in conjunction with the VisualDSP++® development environment to test the capabilities of the ADSP-21489 SHARC processors. The VisualDSP++ development environment aids advanced application code development and debug, such as:

- Create, compile, assemble, and link application programs written in C++, C, and assembly
- Load, run, step, halt, and set breakpoints in application programs
- Read and write data and program memory
- Read and write core and peripheral registers
- Plot memory

Access to the processor from a personal computer (PC) is achieved through a USB port or an external JTAG emulator. The USB interface of the standalone debug agent gives unrestricted access to the processor and evaluation board's peripherals. Analog Devices JTAG emulators offer

faster communication between the host PC and target hardware. To learn more about Analog Devices emulators and processor development tools, go to http://www.analog.com/dsp/tools/.

The ADSP-21489 EZ-Board provides example programs to demonstrate the product capabilities.

The ADSP-21489 EZ-Board installation is part of the VisualDSP++ update 8 or later installation. As an EZ-KIT Lite, an EZ-Board is a licensed product that offers an unrestricted evaluation license for the first 90 days. For details about evaluation license restrictions after the 90 days, refer to "Evaluation License Restrictions" on page 1-8 and the *VisualDSP++ Installation Quick Reference Card*.

Product Overview

The board features:

- Analog Devices ADSP-21489 SHARC processor
  - Core performance up to 400 MHz
  - 176-pin LQFP package
  - 25 MHz CLKIN oscillator
  - 5 Mb of internal RAM memory
- Parallel flash memory
  - Numonyx M29W320EB – 4 MB (4M x 8 bits)
- SDRAM memory
  - Micron MT48LC16M16A2P-6A – 16 Mbx x 16 bits (256 Mb or 32 MB)

- Asynchronous memory (SRAM)
    - ISSI IS61WV102416BLL-10TLI – 1M x 16 bits (2 MB)
- SPI flash memory
    - Numonyx M25P16 – 16 Mb
- Analog audio interface
    - Analog Devices AD1939 audio codec
    - 4 x 2 RCA phono jack for eight channels of stereo output
    - 4 x 1 RCA phono jack for four channel of stereo input
    - Two DB25 connectors for differential inputs/outputs
    - 3.5 mm headphone jack with volume control connected to one of the stereo outputs
    - Supports all eight DACs and four ADCs in TDM and I^2S modes at 48 KHz, 96 KHz, and 192 KHz sample rates
- Digital audio interface (S/PDIF)
    - RCA phono jack output
    - RCA phono jack input
- Temperature monitor
    - ON Semiconductor ADM1032
    - Local and remote temperature sensing
- Universal asynchronous receiver/transmitter (UART)
    - ADM3202 RS-232 line driver/receiver
    - DB9 female connector

- LEDs
    - Eleven LEDs: one board reset (red), eight general-purpose (amber), one temperature sensor (amber), and one power (green)
- Push buttons
    - Five push buttons: one reset, two connected to the DAI, and two connected to FLAG pins of the processor
- Expansion interface II
    - Next generation of the expansion interface design, provides access to most of the processor signals
- Power supply
    - 5V @ 3.6 Amps
- Other features
    - Watch dog timer (WDT) system reset implementation
    - SHARC power measurement jumpers
    - JTAG ICE 14-pin header
    - USB cable

For information about hardware components of the EZ-Board, refer to "ADSP-21489 EZ-Board Hardware Reference" on page 2-1.

Purpose of This Manual

The *ADSP-21489 EZ-Board Evaluation System Manual* provides instructions for installing the product hardware (board). The text describes operation and configuration of the board components and provides guidelines for running your own code on the ADSP-21489 EZ-Board. Finally, a schematic and a bill of materials are provided for reference.

The product software installation is detailed in the *VisualDSP++ Installation Quick Reference Card*.

Intended Audience

The primary audience for this manual is a programmer who is familiar with Analog Devices processors. This manual assumes that the audience has a working knowledge of the appropriate processor architecture and instruction set. Programmers who are unfamiliar with Analog Devices processors can use this manual, but should supplement it with other texts (such as the *ADSP-214xx SHARC Processor Hardware Reference* and *SHARC Processor Instruction Set Reference*) that describe your target architecture.

Programmers who are unfamiliar with VisualDSP++ should refer to the VisualDSP++ online Help and user's or getting started guides. For the locations of these documents, see "Related Documents".

Manual Contents

The manual consists of:

- Chapter 1, "Using ADSP-21489 EZ-Board" on page 1-1
  Describes EZ-Board functionality from a programmer's perspective and provides a simplified memory map.
- Chapter 2, "ADSP-21489 EZ-Board Hardware Reference" on page 2-1
  Provides information about the EZ-Board hardware components.
- Appendix A, "ADSP-21489 EZ-Board Bill Of Materials" on page A-1
  Provides a list of components used to manufacture the EZ-Board.
- Appendix B, "ADSP-21489 EZ-Board Schematic" on page B-1
  Provides resources for board-level debugging, can be used as a reference guide.

What's New in This Manual

This is the first revision of the *ADSP-21489 EZ-Board Evaluation System Manual*.

Technical or Customer Support

You can reach Analog Devices, Inc. Customer Support in the following ways:

- Visit the Embedded Processing and DSP products Web site at
  http://www.analog.com/processors/technical_support
- E-mail tools questions to
  processor.tools.support@analog.com
- E-mail processor questions to
  processor.support@analog.com (World wide support)
  processor.europe@analog.com (Europe support)
  processor.china@analog.com (China support)
- Phone questions to **1-800-ANALOGD**
- Contact your Analog Devices, Inc. local sales office or authorized distributor
- Send questions by mail to:
  Analog Devices, Inc.
  One Technology Way
  P.O. Box 9106
  Norwood, MA 02062-9106
  USA

Supported Processors

This evaluation system supports Analog Devices ADSP-21489 SHARC embedded processors. Functionality of the ADSP-21483, ADSP-21486, ADSP-21487, and ADSP-21488 processors can be evaluated using the same product because the processors have many similarities.

Product Information

Product information can be obtained from the Analog Devices Web site, VisualDSP++ online Help system, and a technical library CD.

Analog Devices Web Site

The Analog Devices Web site, www.analog.com, provides information about a broad range of products—analog integrated circuits, amplifiers, converters, and digital signal processors.

To access a complete technical library for each processor family, go to http://www.analog.com/processors/technical_library. The manuals selection opens a list of current manuals related to the product as well as a link to the previous revisions of the manuals. When locating your manual title, note a possible errata check mark next to the title that leads to the current correction report against the manual.

Also note, MyAnalog.com is a free feature of the Analog Devices Web site that allows customization of a Web page to display only the latest information about products you are interested in. You can choose to receive weekly e-mail notifications containing updates to the Web pages that meet your interests, including documentation errata against all manuals. MyAnalog.com provides access to books, application notes, data sheets, code examples, and more.

Visit MyAnalog.com to sign up. If you are a registered user, just log on. Your user name is your e-mail address.

VisualDSP++ Online Documentation

Online documentation comprises the VisualDSP++ Help system, software tools manuals, hardware tools manuals, processor manuals, Dinkum Abridged C++ library, and FLEXnet License Tools software documenta-

tion. You can search easily across the entire VisualDSP++ documentation set for any topic of interest.

For easy printing, supplementary Portable Documentation Format (`.pdf`) files for all manuals are provided on the VisualDSP++ installation CD.

Each documentation file type is described as follows.

File	Description
`.chm`	Help system files and manuals in Microsoft help format
`.htm` or `.html`	Dinkum Abridged C++ library and FLEXnet License Tools software documentation. Viewing and printing the `.html` files requires a browser, such as Internet Explorer 6.0 (or higher).
`.pdf`	VisualDSP++ and processor manuals in PDF format. Viewing and printing the `.pdf` files requires a PDF reader, such as Adobe Acrobat Reader (4.0 or higher).

Technical Library CD

The technical library CD contains seminar materials, product highlights, a selection guide, and documentation files of processor manuals, VisualDSP++ software manuals, and hardware tools manuals for the following processor families: Blackfin, SHARC, TigerSHARC, ADSP-218x, and ADSP-219x.

To order the technical library CD, go to `http://www.analog.com/processors/technical_library`, navigate to the manuals page for your processor, click the request CD check mark, and fill out the order form.

Data sheets, which can be downloaded from the Analog Devices Web site, change rapidly, and therefore are not included on the technical library CD. Technical manuals change periodically. Check the Web site for the latest manual revisions and associated documentation errata.

EngineerZone

EngineerZone is a technical support forum from Analog Devices. It allows you direct access to ADI technical support engineers. You can search FAQs and technical information to get quick answers to your embedded processing and DSP design questions.

Use EngineerZone to connect with other DSP developers who face similar design challenges. You can also use this open forum to share knowledge and collaborate with the ADI support team and your peers. Visit http://ez.analog.com to sign up.

Social Networking Web Sites

You can now follow Analog Devices processor development on Twitter and LinkedIn. To access:

- Twitter: http://twitter.com/ADIsharc and http://twitter.com/blackfin
- LinkedIn: Network with the LinkedIn group, Analog Devices SHARC or Analog Devices Blackfin: http://www.linkedin.com

Related Documents

For information on product related development software, see the following publications.

Table 1. Related Processor Publications

Title	Description
ADSP-21484/21486/21487/21489 SHARC Processor Preliminary Data Sheet	General functional description, pinout, and timing of the processor.

Table 1. Related Processor Publications (Cont'd)

Title	Description
ADSP-214xx SHARC Processor Hardware Reference	Description of internal processor architecture and all register functions.
SHARC Processor Programming Reference	Description of all allowed processor assembly instructions.

Table 2. Related VisualDSP++ Publications

Title	Description
VisualDSP++ Assembler and Preprocessor Manuals	Description of the assembler function and commands.
VisualDSP++ C/C++ Compiler Manual for SHARC Processors	Description of the complier functions and commands for SHARC processors.
VisualDSP++ Run-Time Library Manual for SHARC Processors	Description of the run-time library functions for SHARC processors.
VisualDSP++ Linker and Utilities Manual	Description of the linker function and commands.
VisualDSP++ Loader and Utilities Manual	Description of the loader/splitter function and commands.

Notation Conventions

Text conventions used in this manual are identified and described as follows.

Example	Description
Close command (**File** menu)	Titles in reference sections indicate the location of an item within the VisualDSP++ environment's menu system (for example, the **Close** command appears on the **File** menu).
`{this | that}`	Alternative required items in syntax descriptions appear within curly brackets and separated by vertical bars; read the example as `this` or `that`. One or the other is required.
`[this | that]`	Optional items in syntax descriptions appear within brackets and separated by vertical bars; read the example as an optional `this` or `that`.
`[this,…]`	Optional item lists in syntax descriptions appear within brackets delimited by commas and terminated with an ellipse; read the example as an optional comma-separated list of `this`.
`.SECTION`	Commands, directives, keywords, and feature names are in text with `letter gothic` font.
`filename`	Non-keyword placeholders appear in text with italic style format.
	Note: For correct operation, ... A Note provides supplementary information on a related topic. In the online version of this book, the word **Note** appears instead of this symbol.
	Caution: Incorrect device operation may result if ... **Caution:** Device damage may result if ... A Caution identifies conditions or inappropriate usage of the product that could lead to undesirable results or product damage. In the online version of this book, the word **Caution** appears instead of this symbol.
	Warning: Injury to device users may result if ... A Warning identifies conditions or inappropriate usage of the product that could lead to conditions that are potentially hazardous for the devices users. In the online version of this book, the word **Warning** appears instead of this symbol.

1 USING ADSP-21489 EZ-BOARD

This chapter provides information to assist you with development of programs for the ADSP-21489 EZ-Board evaluation system.

The following topics are covered.

- "Package Contents" on page 1-2
- "Default Configuration" on page 1-3
- "EZ-Board Installation" on page 1-5
- "EZ-Board Session Startup" on page 1-6
- "Evaluation License Restrictions" on page 1-8
- "Memory Map" on page 1-8
- "SDRAM Interface" on page 1-10
- "SRAM Interface" on page 1-10
- "Parallel Flash Memory Interface" on page 1-11
- "SPI Interface" on page 1-12
- "Watch Dog Timer Interface" on page 1-12
- "Temperature Sensor Interface" on page 1-13
- "S/PDIF Interface" on page 1-14
- "Audio Interface" on page 1-15

- "UART Interface" on page 1-17
- "LEDs and Push Buttons" on page 1-17
- "JTAG Interface" on page 1-19
- "Expansion Interface II" on page 1-20
- "Power Measurements" on page 1-21
- "Power-On-Self Test" on page 1-22
- "Example Programs" on page 1-22
- "Background Telemetry Channel" on page 1-22
- "Reference Design Information" on page 1-23

For information about VisualDSP++, including the boot loading, target options, and other facilities, refer to the online Help.

For more information about the ADSP-21489 SHARC processor, see documents referred to as "Related Documents".

Package Contents

Your ADSP-21489 EZ-Board package contains the following items.

- ADSP-21489 EZ-Board
- *VisualDSP++ Installation Quick Reference Card*
- CD containing:
  - VisualDSP++ software
  - ADSP-21489 EZ-Board debug software

  - USB driver files
  - Example programs
- Universal 5.0V DC power supply
- 3.5 mm stereo headphones
- 6-foot RCA audio cable
- 6-foot 3.5 mm/RCA x 2 Y-cable
- 3.5 mm stereo female to RCA male Y-cable

Contact the vendor where you purchased your EZ-Board or contact Analog Devices, Inc. If any item is missing.

Default Configuration

The EZ-Board evaluation system contains ESD (electrostatic discharge) sensitive devices. Electrostatic charges readily accumulate on the human body and equipment and can discharge without detection. Permanent damage may occur on devices subjected to high-energy discharges. Proper ESD precautions are recommended to avoid performance degradation or loss of functionality. Store unused EZ-Boards in the protective shipping package.

The ADSP-21489 EZ-Board board is designed to run outside your personal computer as a stand-alone unit. You do not have to open your computer case.

When removing the EZ-Board from the package, handle the board carefully to avoid the discharge of static electricity, which can damage some components. Figure 1-1 shows the default jumper and switch settings,

connector locations, and LEDs used in installation. Confirm that your board is in the default configuration before using the board.

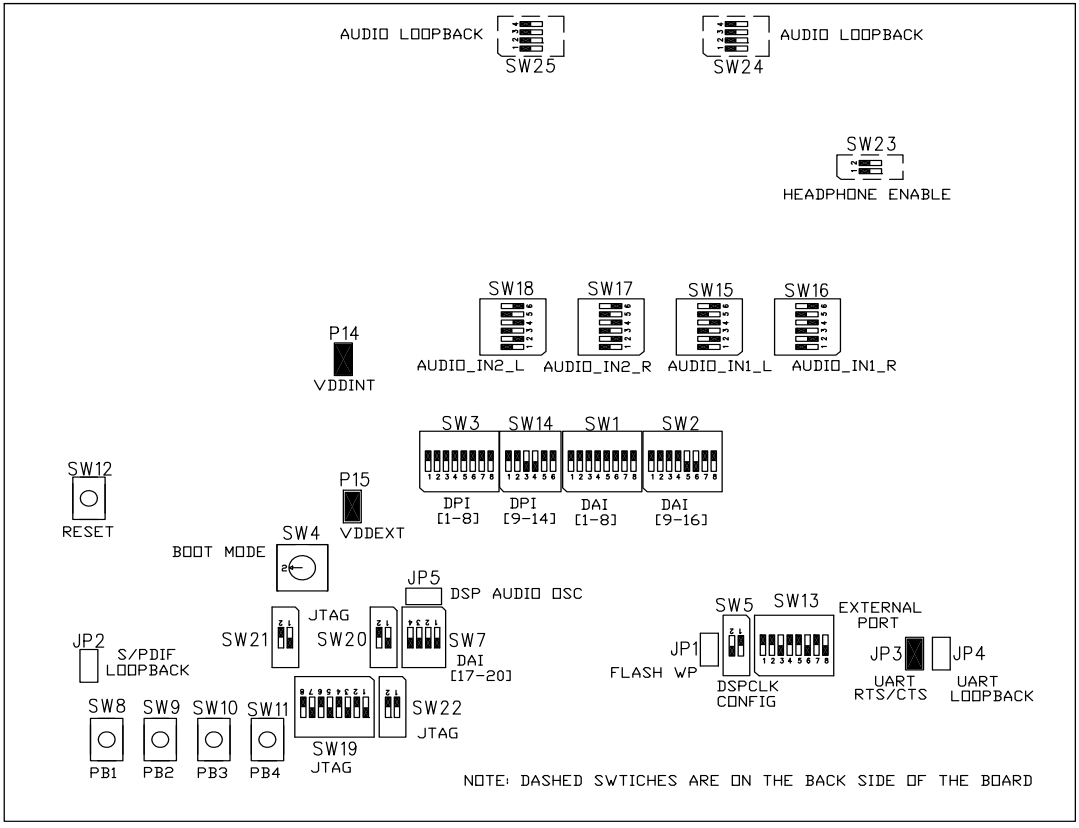

Figure 1-1. Default EZ-Board Hardware Setup

EZ-Board Installation

For correct operation, install the software in the order presented in the *VisualDSP++ Installation Quick Reference Card*. Substitute instructions in step 3 with instructions in this section.

There are two options to connect the EZ-Board hardware to a personal computer (PC) running VisualDSP++ 5.0: via an Analog Devices emulator or via a standalone debug agent module. The standalone debug agent allows a debug agent to interface to the ADSP-21489 EZ-Board. The standalone debug agent is shipped with the kit.

To connect the EZ-Board to a PC via an emulator:

1. Plug the 5V adaptor into connector P16 (labeled 5.0V).
2. Attach the emulator header to connector P1 (labeled JTAG) on the back side of the EZ-Board.

To connect the EZ-Board to a PC via a standalone debug agent:

The debug agent can be used only when power is supplied from the wall adaptor.

1. Attach the standalone debug agent to connectors P1 (labeled JTAG) and ZP1 on the backside of the EZ-Board, watching for the keying pin of P1 to connect correctly.
2. Plug the 5V adaptor into connector P16 (labeled 5.0V).
3. Plug one side of the provided USB cable into a USB connector of the standalone debug agent. Plug the other side of the cable into a USB port of the PC running VisualDSP++ 5.0 update 8 or later.
4. Verify that the yellow USB monitor LED on the standalone debug agent (LED4, located on the back side of the board) is lit. This signifies that the board is communicating properly with the host PC and ready to run VisualDSP++.

EZ-Board Session Startup

1. If you are running VisualDSP++ for the first time, navigate to the VisualDSP++ environment via the **Start–>Programs** menu. The main window appears. Note that VisualDSP++ is not connected to any session. Skip the rest of this step to step 2.

   If you have run VisualDSP++ previously, the last opened session appears on the screen. You can override the default behavior and force VisualDSP++ to start a new session by pressing and holding down the **Ctrl** key while starting VisualDSP++. Do not release the **Ctrl** key until the **Session Wizard** appears on the screen. Go to step 3.

2. To connect to a new EZ-Board session, start **Session Wizard** by selecting one of the following.

   - From the **Session** menu, **New Session**.
   - From the **Session** menu, **Session List**. Then click **New Session** from the **Session List** dialog box.
   - From the **Session** menu, **Connect to Target**.

3. The **Select Processor** page of the wizard appears on the screen. Ensure **SHARC** is selected in **Processor family**. In **Choose a target processor**, select **ADSP-21489**. Click **Next**.

4. The **Select Connection Type** page of the wizard appears on the screen. For standalone debug agent connections, select **EZ-KIT Lite** and click **Next**. For emulator connections, select **Emulator** and click **Next**.

5. The **Select Platform** page of the wizard appears on the screen. For standalone debug agent connections, ensure that the selected platform is **ADSP-21489 EZ-KIT Lite via Debug Agent**. For emulator connections, choose the type of emulator that is connected.

Specify your own **Session name** for the session or accept the default name.

The session name can be a string of any length; although, the box displays approximately 32 characters. The session name can include space characters. If you do not specify a session name, VisualDSP++ creates a session name by combining the name of the selected platform with the selected processor. The only way to change a session name later is to delete the session and open a new session.

Click **Next**.

6. The **Finish** page of the wizard appears on the screen. The page displays your selections. Check the selections. If you are not satisfied, click **Back** to make changes; otherwise, click **Finish**. VisualDSP++ creates the new session and connects to the EZ-Board. Once connected, the main window's title is changed to include the session name set in step 5.

To disconnect from a session, click the disconnect button or select **Session–>Disconnect from Target**.

To delete a session, select **Session –> Session List**. Select the session name from the list and click **Delete**. Click **OK**.

Evaluation License Restrictions

The ADSP-21489 EZ-Board installation is part of the VisualDSP++ 5.0 update 8. The EZ-Board is a licensed product that offers an unrestricted evaluation license for the first 90 days. Once the initial unrestricted 90-day evaluation license expires:

- VisualDSP++ restricts a connection to the ADSP-21489 EZ-Board via the USB port of the standalone debug agent interface only. Connections to simulators and emulation products are no longer allowed.
- The linker restricts a user program to 27306 PM words for code space with no restrictions for data space.
- The EZ-Board hardware must be connected and powered up to use VisualDSP++ with a valid evaluation or permanent license.

Refer to the *VisualDSP++ Installation Quick Reference Card* for details.

Memory Map

The ADSP-21489 processor has internal static random access memory (SRAM) for instructions and data storage. See Table 1-1. The internal memory details can be found in the *ADSP-214xx SHARC Processor Hardware Reference.*

The EZ-Board includes three types of external memory: synchronous dynamic random access memory (SDRAM), serial peripheral interconnect

(SPI) flash, and parallel flash. See Table 1-2. For more information about a specific memory type, go to the respective section in this chapter.

Table 1-1. EZ-Board Internal (Core-Accessible) Memory Map

Start Address	End Address	Contents
0x0000 0000	0x0003 FFFF	IOP Registers
0x0004 0000	0x0004 7FFF	Block 0 ROM (Reserved)
0x0004 8000	0x0004 8FFF	Reserved
0x0004 9000	0x0004 EFFF	Block 0 SRAM
0x0004 F000	0x0004 FFFF	Reserved
0x0005 0000	0x0005 7FFF	Block 1 ROM (Reserved)
0x0005 8000	0x0005 8FFF	Reserved
0x0005 9000	0x0005 EFFF	Block 1 SRAM
0x0005 F000	0x0005 FFFF	Reserved
0x0006 0000	0x0006 3FFF	Block 2 SRAM
0x0006 4000	0x0006 FFFF	Reserved
0x0007 0000	0x0007 3FFF	Block 3 SRAM
0x0007 4000	0x0007 FFFF	Reserved

Table 1-2. EZ-Board External (Interface-Accessible) Memory Map

Start Address	End Address	Content
0x0020 0000	0x009F FFFF	SDRAM (~MS0)
0x0400 0000	0x043F FFFF	Flash memory (~MS1)
0x0800 0000 0x0C00 0000	0x08FF FFFF 0x0BFF FFFF	Unused chip select (~MS2) for non-SDRAM addresses Unused chip select (~MS2) for SDRAM addresses
0x0C00 0000 0x0C00 0000	0x0C0F FFFF 0x0C07 FFFF	SRAM (~MS3) for 16-bit address space SRAM (~MS3) for 32-bit address space

SDRAM Interface

The ADSP-21489 processor connects to a 32 MB Micron MT48LC16M16A2P-6A chip through the SDRAM controller. The SDRAM memory controller on the processor and SDRAM memory chip are powered by the on-board 3.3V regulator. The SDRAM controller and memory on the EZ-Board can operate at a maximum clock frequency of 166 MHz.

With a VisualDSP++ session running and connected to the EZ-Board via the USB standalone debug agent, the SDRAM registers are configured automatically each time the processor is reset. The values are used whenever SDRAM is accessed through the debugger (for example, when viewing memory windows or loading a program).

To disable the automatic setting of SDRAM registers, select **Target Options** from the **Settings** menu in VisualDSP++ and uncheck **Use XML reset values**. For more information on changing reset values, refer to the online Help.

An example program is included in the EZ-Board installation directory to demonstrate how to setup and access the SDRAM interface. For more information on how to initialize the registers after a reset, search the VisualDSP++ online Help for “reset values”.

SRAM Interface

The board has a 1M x 16-bit flash memory connected to the processor’s AMI (asynchronous memory interface). The SRAM can be accessed via the asynchronous memory select 3 pin. It allows access to 16 bits of data and interfaces to address line 0 through 19 of the processor.

An example program is included in the EZ-Board installation directory to demonstrate how to setup and access the SRAM interface. For more infor-

mation on how to initialize the registers after a reset, search the VisualDSP++ online Help for “reset values”.

Parallel Flash Memory Interface

The parallel flash memory interface of the ADSP-21489 EZ-Board contains a 4 MB (4M x 8 bits) Numonyx M29W320EB chip. Flash memory is connected to the 8-bit data bus and address lines 0 through 21. Chip enable is decoded by the MS1 select line (default) through switch SW13 position 2. See “External Port Enable Switch (SW13)” on page 2-12. The address range for flash memory is 0x0400 0000 to 0x043F FFFF.

Flash memory is pre-loaded with boot code for the power-on-self test (POST) program. For more information, refer to “Power-On-Self Test” on page 1-22.

By default, the EZ-Board boots from the 8-bit parallel flash memory. The processor boots from flash memory if the boot mode select switch (SW4) is set to position 2; see “Boot Mode Select Switch (SW4)” on page 2-10.

Flash memory code can be modified. For instructions, refer to the online Help and example program included in the EZ-Board installation directory.

For more information about the parallel flash device, refer to the Numonyx Web site: http://www.numonyx.com.

SPI Interface

The ADSP-21489 processor has two SPI ports, which can be accessed via the digital peripheral interface (DPI) pins.

The SPI flash memory, a 16 Mb ST M25P16 device, connects to the SPI port of the processor and designates:

- DPI pin 5 (DPI_P5) as a chip select
- DPI pin 3 (DPI_P3) as the SPI clock
- DPI pin 1 (DPI_P1) as the master out slave in (MOSI) pin
- DPI pin 2 (DPI_P2) as the master in slave out (MISO) pin

The same SPI port and DPI pins are connected to the serial flash memory and audio codec via switch SW3. See "DPI [1–8] Enable Switch (SW3)" on page 2-9. The DPI pins also are available on the expansion interface II.

By default, the EZ-Board boots from the 8-bit flash parallel memory. SPI flash can be selected as the boot source by setting the boot mode select switch (SW4) to position 1. See "Boot Mode Select Switch (SW4)" on page 2-10.

The audio codec is set up to use DPI pin 4 as the SPI chip select. For more information, refer to "Audio Interface" on page 1-15.

Watch Dog Timer Interface

The ADSP-21489 processor includes a 32-bit watch dog timer (WDT) that can be used to implement a software watch dog function. A software watch dog can improve system reliability by forcing the processor to a known state through generation of a system reset if the timer expires before being reloaded by software. Software initializes the count value of the timer and then enables the timer.

The watch dog timer resets both the core and internal peripherals. After an external reset, the WDT must be disabled by default. Software must be able to determine if the watch dog has been the source of the hardware reset by interrogating a status bit in the watch dog timer control register.

Be default, the watch timer interface is turned off. In order to use the feature, a user needs to turn switch SW13 position 8 ON. SW13 connects the watch dog reset out pin to the ADM708 system reset circuit. See "External Port Enable Switch (SW13)" on page 2-12. Special attention must be paid to this function because it can cause the processor and EZ-Board to remain in a permanent reset.

Example programs are included in the EZ-Board installation directory to demonstrate watch dog timer functionality.

Temperature Sensor Interface

Two external pins (THD_P and THD_M) of the processor are connected to an internal thermal diode. The EZ-Board uses ON Semiconductor's ADM1032 digital thermometer and under/over temperature alarm to monitor the processor's temperature as well as the thermal diode's (inside the ADM1032 device). The thermometer uses the I^2C bus, DPI pins, and flag pins of the processor. The following DPI and flag pins are used for temperature monitoring.

- DPI pin 8 (DPI_P8) as the serial clock signal (SCK)
- DPI pin 7 (DPI_P7) as the serial data signal (SDA)
- Flag 0 as the IRQ (not used by default)
- Flag 3 as the thermal limit (not used by default)

The two DPI pins are required: the pins are connected to the temperature sensing monitor via a switch (SW3) and can be shut off if the pins are used on the expansion II interface. The thermal limit flag is connected to

an LED (LED11) for a visual alarm if the temp exceeds the limit. The thermal limit flag and ADM1032 IRQ connect to the flag pins of the processor, but are nonessential for temperature monitoring. Consequently, the SW13 switch positions that control the flag pins are OFF by default.

See "DPI [1–8] Enable Switch (SW3)" on page 2-9 and "External Port Enable Switch (SW13)" on page 2-12 for more information.

Example programs are included in the EZ-Board installation directory to demonstrate sensor operations.

S/PDIF Interface

The ADSP-21489 processor has a built-in S/PDIF transmitter and receiver for digital audio applications. The EZ-Board supports the S/PDIF interface and brings out both the transmitter and receiver via RCA connectors J6 and J7, respectively. The S/PDIF's in and out pins are connected by DAI pins via switches SW1 and SW7:

- DAI pin 1 (DAI_P1) as SPDIF_OUT
- DAI pin 18 (DPI_P18) as SPDIF_IN

SW1 and SW7 can be turned OFF to disconnect the DAI pins from the RCA connectors if the pins are used on the expansion II interface. See "DAI [1–8] Enable Switch (SW1)" on page 2-8 and "DAI [17–20] Enable Switch (SW7)" on page 2-11 for more information.

Audio Interface

The AD1939 device is a high-performance, single-chip codec featuring eight digital-to-analog converters (DACs) for audio output and four analog-to-digital converters (ADCs) for audio input. This translates to four stereo channels of audio out and two stereo channels of audio in. The codec can input and output data at a sample rate of up to 192 kHz on all channels.

The analog audio channels are available via single-ended RCA connectors (J4 and J5) or differential DB25 connectors (P8 and P9). By default, the EZ-Board is shipped with the RCA connectors used by the AD1939 codec for audio in and out. To use the differential connectors, change DIP switches SW15-18. A standard, off the shelf DB25 connector to XLR cables is required to operate in this mode.

For more information, see "Audio In1 Left Selection Switch (SW15)" on page 2-14 through "Audio In2 Left Selection Switch (SW18)" on page 2-16, and "ADSP-21489 EZ-Board Schematic" on page B-1.

The processor interfaces with the codec via DAI and DPI pins. The DAI pins can be configured to transfer serial data from the codec in Time-Division Multiplexing (TDM) or Integrated Interchip Sound (I^2S) mode. See "DAI Interface" on page 2-3 for more information about the AD1939 connection to the DAI. The DPI interface pins can be configured to use the SPI interface of the processor to set up the codec's control registers. See "DPI Interface" on page 2-4 for more information about the AD1939 connection to the DPI.

The master input clock (MCLK) of the codec is generated by the on-board 12.288 MHz oscillator. The internal PLL of the codec is used to generate varying sample rates. The codec can be set up for 48 KHz, 96 KHz, or 192 KHz frequencies. The codec can run at these frequencies in both TDM and I^2S modes with all ADCs inputs and DACs outputs. To run

192 KHz with all ADCs and DACs in TDM mode, the codec must run in dual-line TDM mode.

For information on how to configure the multi-channel codec, refer to the product datasheet at:
http://www.analog.com/en/audiovideo-products/audio-codecs/ad1939/products/product.html.

The EZ-Board is connected to the AD1939 codec in master mode. The internal PLL drives the ABCLK and ALRCLK clock signals out. Both clocks are driven back to the codec's DBCLK and DLRCLK pins via the R257 and R258 resistors. The ABCLK and ALRCLK clocks that are driven by the codec also connect to the processor's serial ports via the DAI pins. Resistors R262 and R263 are used to feed the bit clock and frame sync signals of the processor's serial ports. Connecting the codec in this manner enables a flexible audio sample rate and allows the processor to run at the maximum core frequency.

The audio interface also has a 3.5 mm connector (J8) for headphones. The headphones share the output with the external DAC5 and DAC6 circuits of the analog audio interface. Switch SW23 must be enabled for the headphones. A volume control potentiometer (R493) is used to increase or decrease the headphone's volume. For more information, see "Headphone Enable Switch (SW23)" on page 2-18.

Example programs are included in the EZ-Board installation directory to demonstrate how to configure and use the board's analog audio interface.

The DAI and DPI pins going to the AD1939 device can be disabled, then used again on the expansion II interface. Refer to "DAI Interface" on page 2-3 and "DPI Interface" on page 2-4 for more information about the DAI and DPI switches.

UART Interface

The ADSP-21489 processor features a built-in universal asynchronous receiver and transmitter (UART). The UART interface supports full RS-232 functionality via the Analog Devices 3.3V ADM3202 line driver and receiver (U8). The UART signals are available on the EZ-Board via a DIP switch (SW14). The UART signals routed through the DIP switch can be disconnected from the respective DPI interface and used on the expansion II interface. The following DPI pins are used for the RS-232 interface.

- DPI pin 9 (DPI_P9) as UART_TX
- DPI pin 10 (DPI_P10) as UART_RX
- DPI pin 11 (DPI_P11) as UART_RTS
- DPI pin 12 (DPI_P12) as UART_CTS

Example programs are included in the EZ-Board installation directory to demonstrate UART and RS-232 operations.

For more information about the UART interface, refer to the *ADSP-214xx SHARC Processor Hardware Reference*.

LEDs and Push Buttons

The EZ-Board has eight general-purpose user LEDs connected directly to the processor, one LED connected to the temperature sensing monitor (ADM1032), one EZ-Board power LED, and one board reset LED. The EZ-board also has five push buttons: four general-purpose push buttons connected directly to the processor and one push button for a board reset.

Table 1-3 summarizes LED connections to the processor. To use the LEDs connected to DAI or DPI, configure the respective registers of the

processor. For more information, refer to the *ADSP-214xx SHARC Processor Hardware Reference*.

Table 1-3. LED Connections

LED Reference Designator	Processor Pin	Connected via Switch
LED1	DPI_P6	SW3.6
LED2	DPI_P13	SW14.5
LED3	DPI_P14	SW14.6
LED4	DAI_P3	SW1.3
LED5	DAI_P4	SW1.4
LED6	DAI_P15	SW2.7
LED7	DAI_P16	SW2.8
LED8	DAI_P17	SW7.1

Two general-purpose push buttons are attached to the flag pins of the processor, while the other two are attached to the DAI pins. All of the push buttons and LEDs are connected to the processor through DIP switches. The DIP switches can disconnect the processor pins, which in turn are connected to the push buttons and LEDs. See the respective switch section in "ADSP-21489 EZ-Board Hardware Reference" on page 2-1.

The state of the push buttons connected to the flag pins can be determined by reading the FLAG register. The push buttons connected to the DAI pins must be configured as interrupts. It is necessary to set up an interrupt routine to determine each pin's state. Table 1-3 shows the push button and processor connections.

Table 1-4. Push Button Connections

PB Reference Designator	Processor Pin	Connected via Switch
SW8 (PB1)	FLAG1/IRQ1	SW13.4
SW9 (PB2)	FLAG2/IRQ2/MS2	SW13.5

Table 1-4. Push Button Connections (Cont'd)

PB Reference Designator	Processor Pin	Connected via Switch
SW10 (PB3)	DAI_P19	SW7.3
SW11 (PB4)	DAI_P20	SW7.4

An example program is included in the ADSP-21489 installation directory to demonstrate functionality of the LEDs and push buttons.

JTAG Interface

The JTAG connector (P1) allows the standalone debug agent module to connect a VisualDSP++ debug session to the ADSP-21489 processor. The debug agent operates only when the external 5V wall adaptor (P16) is used.

The standalone debug agent can be replaced by an external emulator, such as the Analog Devices high-performance USB-based emulator. Be careful not to damage the connectors when removing the debug agent. The emulator is connected to P1 on the back side of the board. See "EZ-Board Installation" on page 1-5 for more information.

The ADSP-21489 EZ-Board can be set up as a single- or multi-processor system. By default, the board is set up in single-processor mode. In single-processor mode, create a VisualDSP++ session based on a standalone debug agent or an external emulator. To use the EZ-Board in multi-processor mode, install an external emulator. Only one external emulator is required for the main EZ-Board; other EZ-Boards in the JTAG chain do not require an emulator. In this mode, create a VisualDSP++ platform based on the number of JTAG devices in the JTAG chain using the VisualDSP++ Configurator. Then create a session in VisualDSP++ based on the newly created platform.

For a dual ADSP-21489 EZ-Board session, connect two EZ-Boards via connectors J3 and P12. Flip one of the two EZ-Boards by 180 degrees to allow the boards to mate. To switch between single- and multi-processor modes, use DIP switches SW19-22. For more information, see "JTAG Switches (SW19–22)" on page 2-16.

For three or more ADSP-21489 EZ-Board sessions, connect each of the EZ-Board with JTAG cables. The cables connect JTAG pins of each EZ-Board. By using the cables, you put the EZ-Board in a JTAG serial chain. For three EZ-Boards, three JTAG cables are required. Similarly, for four EZ-Boards, four JTAG cables are required. Note that each respective EZ-board also requires its own power supply.

Part numbers for Samtec standard, off the shelf link port cables can be found in "MP JTAG Out Connector (P12)" on page 2-28.

For more information about emulators, contact Analog Devices or go to: http://www.analog.com/en/embedded-processing-dsp/sharc/content/sharc_development_tools/fca.html.

Expansion Interface II

The expansion interface II allows an Analog Devices EZ-Extender or a custom-design daughter board to be tested across various hardware platforms with identical expansion interfaces.

The expansion interface II implemented on the ADSP-21489 EZ-Board consists of two connectors: a 0.1 in. shrouded header (P2) and a Samtec QMS series header (J1). The connectors contain a majority of the ADSP-21489 processor's signals.

For pinout information, go to "ADSP-21489 EZ-Board Schematic" on page B-1. The mechanical dimensions of the expansion connectors can be obtained by contacting Technical or Customer Support.

For more information about daughter boards, visit the Analog Devices Web site at:
http://www.analog.com/en/embedded-processing-dsp/sharc/content/sharc_development_tools/fca.html.

Limits to current and interface speed must be taken into consideration when using the expansion interface II. Current for the expansion interface II is sourced from the EZ-Board; therefore, the current should be limited to 1A for 5V and 500 mA for the 3.3V planes. If more current is required, then a separate power connector and a regulator must be designed on a daughter card. Additional circuitry can add extra loading to signals, decreasing their maximum effective speed.

Analog Devices does not support and is not responsible for the effects of additional circuitry.

Power Measurements

Several locations are provided for measuring the current draw from various power planes. Precision 0.05 ohm shunt resistors are available on the VDDINT and VDDEXT voltage domains. For current draw measurements, the associated jumper on connectors P14–15 must be removed. Once the jumper is removed, voltage across the resistor can be measured using an oscilloscope. Once voltage is measured, current can be calculated by dividing voltage by 0.05. For the highest accuracy, a differential probe should be used for measuring voltage across the resistor.

For more information, see "VDDINT Power Connector (P14)" on page 2-28 and "VDDEXT Power Connector (P15)" on page 2-29.

Power-On-Self Test

The power-on-self-test program (POST) tests all EZ-Board peripherals and validates functionality as well as connectivity to the processor. Once assembled, each EZ-Board is fully tested for an extended period of time with a POST. All EZ-Boards are shipped with the POST preloaded into one of their on-board flash memories. The POST is executed by resetting the board and pressing the proper push button(s). The POST also can be used for reference in custom software designs or hardware troubleshooting. Note that the source code for the POST program is included in the VisualDSP++ installation directory along with the readme text file, which describes how the board is configured to run a POST.

Example Programs

Example programs are provided with the ADSP-21489 EZ-Board to demonstrate various capabilities of the product. The programs are installed with the VisualDSP++ software and can be found in the `<install_path>\214xx\Examples\ADSP-21489 EZ-Board` directory. Refer to the readme file provided with each example for more information.

Background Telemetry Channel

The USB debug agent supports the background telemetry channel (BTC), which facilitates data exchange between VisualDSP++ and the processor without interrupting processor execution.

The BTC allows you to read and write data in real time while the processor continues to execute. For increased performance of the BTC, including faster reading and writing, please check our latest line of processor emulators at:
http://www.analog.com/en/embedded-processing-dsp/sharc/USB-EMU-

LATOR/products/product.html. For more information about BTC, see the online help.

Reference Design Information

A reference design info package is available for download on the Analog Devices Web site. The package provides information on the design, layout, fabrication, and assembly of the EZ-KIT Lite and EZ-Board products.

The information can be found at:
http://www.analog.com/en/evaluation-boards-kits/resources/embedded-processing-dsp/blackfin/index.html.

2 ADSP-21489 EZ-BOARD HARDWARE REFERENCE

This chapter describes the hardware design of the ADSP-21489 EZ-Board board.

The following topics are covered.

- "System Architecture" on page 2-2
  Describes the board's configuration and explains how the board components interface with the processor.
- "Flags and Memory Selects" on page 2-6
  Shows the locations and describes the DAI pins, DPI pins, general purpose flags, and asynchronous memory select lines.
- "Push Buttons and Switches" on page 2-7
  Shows the locations and describes the push buttons and switches.
- "Jumpers" on page 2-19
  Shows the locations and describes the configuration jumpers.
- "LEDs" on page 2-21
  Shows the locations and describes the LEDs.
- "Connectors" on page 2-24
  Shows the locations and provides part numbers for the on-board connectors. In addition, the manufacturer and part number information is provided for the mating parts.

System Architecture

This section describes the processor's configuration on the EZ-Board (Figure 2-1).

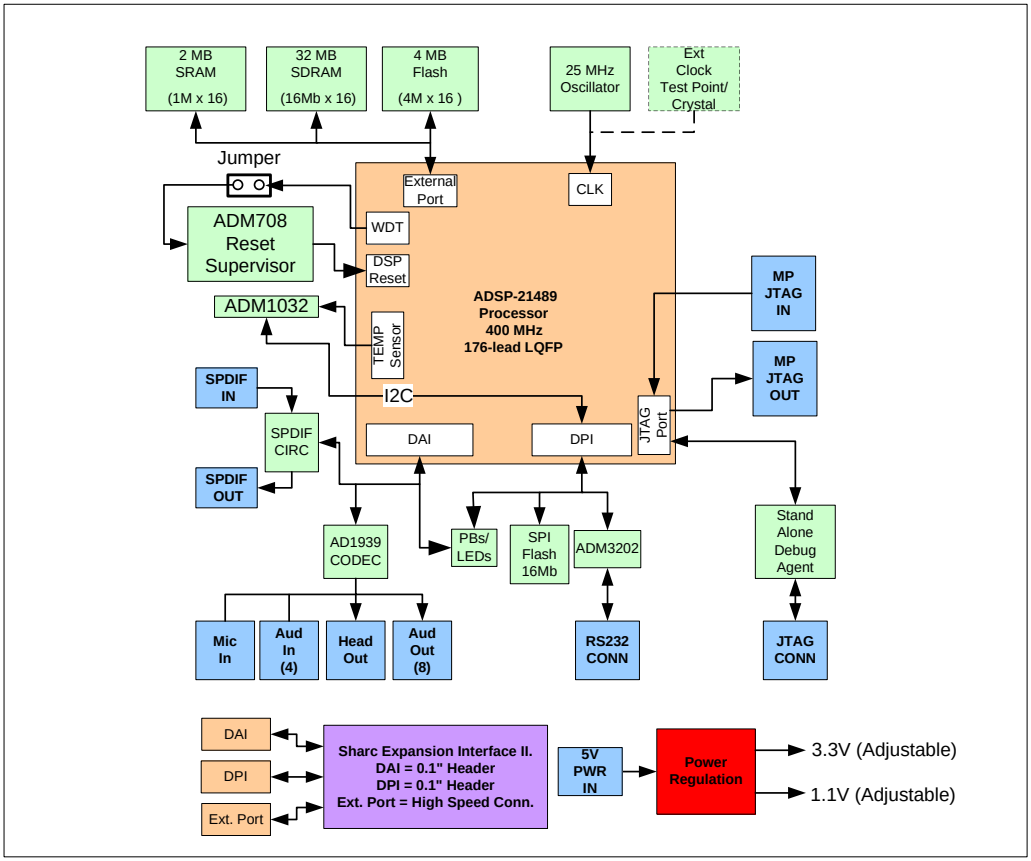

Figure 2-1. EZ-Board Block Diagram

The EZ-Board is designed to demonstrate the ADSP-21489 SHARC processor capabilities. The processor runs at 400 MHz and has an I/O voltage of 3.3V. The core voltage of the processor is 1.1V.

The input clock is 25 MHz. The default boot mode of the processor is external parallel flash boot. See "Boot Mode Select Switch (SW4)" on page 2-10 for information on how to change the default boot mode.

DAI Interface

The digital application interface (DAI) pins are connected to the signal routing unit (SRU) of the processor. The SRU is a flexible routing system providing a large system of signal flows within the processor. The SRU allows you to route the DAI pins to different internal peripherals in various combinations.

The DAI connects various peripherals on the EZ-Board. Table 2-1 shows the DAI pin names, associated peripheral and net names, switch designators through which the pins are connected to the peripherals, and default switch settings.

Table 2-1. DAI Connections

DAI Pin	Peripheral	Peripheral Net	Connected via Switch	Switch Setting (Default)
DAI_P1	S/PDIF	SPDIF_OUT	SW1.1	ON
DAI_P2	AD1939	SOFT_RESET	SW1.2	ON
DAI_P3	LEDs	LED4	SW1.3	ON
DAI_P4	LEDs	LED5	SW1.4	ON
DAI_P5	AD1939	ASDATA1	SW1.5	ON
DAI_P6	AD1939	ASDATA2	SW1.6	ON
DAI_P7	AD1939	ABCLK	SW1.7	ON
DAI_P8	AD1939	ALRCLK	SW1.8	ON
DAI_P9	AD1939	DSDATA4	SW2.1	ON
DAI_P10	AD1939	DSDATA3	SW2.2	ON
DAI_P11	AD1939	DSDATA2	SW2.3	ON
DAI_P12	AD1939	DSDATA1	SW2.4	ON

Table 2-1. DAI Connections (Cont'd)

DAI Pin	Peripheral	Peripheral Net	Connected via Switch	Switch Setting (Default)
DAI_P13	AD1939	DBCLK	SW2.5	OFF
DAI_P14	AD1939	DLRCLK	SW2.6	OFF
DAI_P15	LEDs	LED6	SW2.7	ON
DAI_P16	LEDs	LED7	SW2.8	ON
DAI_P17	LEDs	LED8	SW7.1	ON
DAI_P18	S/PDIF	SPDIF_IN	SW7.2	ON
DAI_P19	Push buttons	PB3	SW7.3	ON
DAI_P20	Push buttons	PB4	SW7.4	ON

To use the DAI on the expansion II interface, disable any signal driving a DAI pin with the associated switch. The pinout of the expansion connectors can be found in "ADSP-21489 EZ-Board Schematic" on page B-1.

DPI Interface

The digital peripheral interface (DPI) pins are connected to a second signal routing unit of the processor (SRU2). The SRU2 unit, similar to the SRU, is a flexible routing system providing a large system of signal flows within the processor. The SRU2 allows you to route the DPI pins to different internal peripherals in various combinations.

The DPI connects various peripherals on the EZ-Board. Table 2-2 shows the DPI pin names, associated peripheral and net names, switch designa-

tors through which the pins are connected to the peripherals, and default switch settings.

Table 2-2. DPI Connections

DPI Pin	Peripheral	Peripheral Net	Connected via Switch	Switch Setting (Default)
DPI_P1	SPI memory/ AD1939	SPI_MOSI	SW3.1	ON
DPI_P2	SPI memory/ AD1939	SPI_MISO	SW3.2	ON
DPI_P3	SPI memory/ AD1939	SPI_CLK	SW3.3	ON
DPI_P4	AD1939	AD1939_CS	SW3.4	ON
DPI_P5	SPI memory	SPI_CS	SW3.5	ON
DPI_P6	LEDs	LED1	SW3.6	ON
DPI_P7	Temp sensor	TEMP_SDA	SW3.7	ON
DPI_P8	Temp sensor	TEMP_SCK	SW3.8	ON
DPI_P9	UART	UART_TX	SW14.1	ON
DPI_P10	UART	UART_RX	SW14.2	ON
DPI_P11	UART	UART_RTS	SW14.3	OFF
DPI_P12	UART	UART_CTS	SW14.4	OFF
DPI_P13	UART	LED2	SW14.5	ON
DPI_P14	UART	LED3	SW14.6	ON

To use the DPI on the expansion II interface, disable any signal driving a DPI pin with the associated switch. The pinout of the expansion connectors can be found in “ADSP-21489 EZ-Board Schematic” on page B-1.

Flags and Memory Selects

The processor has four asynchronous memory selects, four flag pins, three interrupt request pins, and one timer expired pin. All flag/memory pins are multi-functional and depend on the ADSP-21489 processor setup. Table 2-3 shows the pin names, corresponding peripheral and net names, switch designators through which the pins are connected to the peripherals, and default switch settings.

To use the flags or memory selects on the expansion II interface, disable any signal driving a flag or memory pin with the associated switch. The pinout of the expansion connectors can be found in "ADSP-21489 EZ-Board Schematic" on page B-1.

Table 2-3. Flags and Memory Select Connections

Flag/Memory Pin	Peripheral	Peripheral Net	Connected via Switch	Switch Setting (Default)
MS0	SDRAM	SDRAM_CS	SW13.1	ON
MS1	Parallel flash memory	FLASH_CS	SW13.2	ON
FLAG0/IRQ0	Temp sensor	TEMP_IRQ	SW13.3	OFF
FLAG1/IRQ1	Push buttons	PB1	SW13.4	ON
FLAG2/IRQ2/MS2	Push buttons	PB2	SW13.5	ON
FLAG3/TIMEXP/MS3	Temp Sensor	TEMP_THERM	SW13.6	OFF
FLAG3/TIMEXP/MS3	SRAM	SRAM_CS	SW13.7	ON
WDTRSTO_Z	Reset Supervisory IC	WDTRSTO	SW13.8	OFF

Push Buttons and Switches

This section describes operation of the push buttons and switches. The push button and switch locations are shown in Figure 2-2.

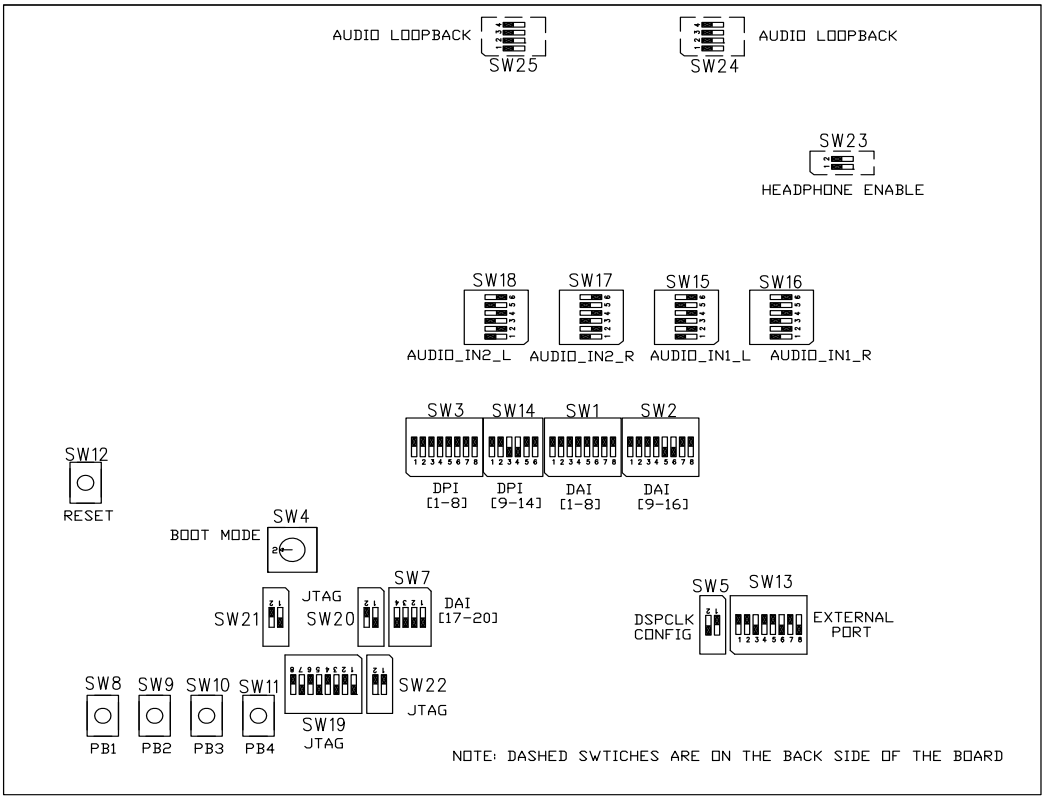

Figure 2-2. Push Button and Switch Locations

DAI [1–8] Enable Switch (SW1)

The DAI [1–8] enable switch (SW1) disconnects DAI pins one through eight on the processor from the associated peripherals on the EZ-Board and allows the DAI signals to be used on the expansion II interface. See Table 2-4.

Table 2-4. DAI [1–8] Enable Switch (SW1)

SW1 Position	DAI Pin	Peripheral	Peripheral Net	Switch Setting (Default)
SW1.1	DAI_P1	S/PDIF	SPDIF_OUT	ON
SW1.2	DAI_P2	AD1939	AD1939_SOFT_RESET	ON
SW1.3	DAI_P3	LEDs	LED4	ON
SW1.4	DAI_P4	LEDs	LED5	ON
SW1.5	DAI_P5	AD1939	ASDATA1	ON
SW1.6	DAI_P6	AD1939	ASDATA2	ON
SW1.7	DAI_P7	AD1939	ABCLK	ON
SW1.8	DAI_P8	AD1939	ALRCLK	ON

DAI [9–16] Enable Switch (SW2)

The DAI [9–16] enable switch (SW2) disconnects DAI pins nine through 16 on the processor from the associated peripherals on the EZ-Board and allows the DAI signals to be used on the expansion II interface. See Table 2-5.

Table 2-5. DAI [9–16] Enable Switch (SW2)

SW2 Position	DAI Pin	Peripheral	Peripheral Net	Switch Setting (Default)
SW2.1	DAI_P9	AD1939	DSDATA4	ON
SW2.2	DAI_P10	AD1939	DSDATA3	ON

Table 2-5. DAI [9–16] Enable Switch (SW2) (Cont'd)

SW2 Position	DAI Pin	Peripheral	Peripheral Net	Switch Setting (Default)
SW2.3	DAI_P11	AD1939	DSDATA2	ON
SW2.4	DAI_P12	AD1939	DSDATA1	ON
SW2.5	DAI_P13	AD1939	DBCLK	OFF
SW2.6	DAI_P14	AD1939	DLRCLK	OFF
SW2.7	DAI_P15	LEDs	LED6	ON
SW2.8	DAI_P16	LEDs	LED7	ON

DPI [1–8] Enable Switch (SW3)

The DPI [1–8] enable switch (SW3) disconnects DPI pins one through eight on the processor from the associated peripherals on the EZ-Board and allows the DPI signals to be used on the expansion II interface. See Table 2-6.

Table 2-6. DPI [1–8] Enable Switch (SW3)

SW3 Position	DPI Pin	Peripheral	Peripheral Net	Switch Setting (Default)
SW3.1	DPI_P1	SPI memory AD1939	SPI_MOSI	ON
SW3.2	DPI_P2	SPI memory AD1939	SPI_MISO	ON
SW3.3	DPI_P3	SPI memory AD1939	SPI_CLK	ON
SW3.4	DPI_P4	AD1939	AD1939_CS	ON
SW3.5	DPI_P5	SPI memory	SPI_CS	ON
SW3.6	DPI_P6	LEDs	LED1	ON
SW3.7	DPI_P7	Temp sensor	TEMP_SDA	ON
SW3.8	DPI_P8	Temp sensor	TEMP_SCK	ON

Boot Mode Select Switch (SW4)

The boot mode select switch (SW4) determines the boot mode of the processor. Table 2-7 shows the available boot mode settings. By default, the processor boots from the on-board parallel flash memory.

The selected position of SW4 is marked by the notch down the entire rotating portion of the switch, not the small arrow.

Table 2-7. Boot Mode Select Switch (SW4)

SW4 Position	Processor Boot Mode
0	SPI slave boot
1	Boot from SPI flash memory (SPI master boot)
2	**Boot from 8-bit external parallel flash memory (default)**
3	Reserved
4	Reserved
5	Reserved
6	Reserved
7	Reserved

DSP Clock Configuration Switch (SW5)

The clock configuration switch (SW5) controls the core frequency of the processor at power up. The core to clock-in ratio is multiplied by the 25 MHz oscillator (U7) to produce the power up core frequency. Table 2-8 shows the switch settings.

The core clock frequency can be increased or decreased via software by writing to the PMCTL register. For more information on changing the core

clock frequency and other settings, refer to the *ADSP-214xx SHARC Processor Hardware Reference*.

Table 2-8. Processor Clock Configuration Switch (SW5)

Position 1 CLKCFG0	Position 2 CLKCFG0	Clock Ratio Core: Clock
ON	ON	Reserved
ON	OFF	32:1
OFF	**ON**	**16:1 (default)**
OFF	OFF	6:1

DAI [17–20] Enable Switch (SW7)

The DAI [17–20] enable switch (SW7) disconnects DAI pins 17 through 20 on the processor from the associated peripherals on the EZ-Board and allows the DAI signals to be used on the expansion II interface. See Table 2-9.

Table 2-9. DAI [17–20] Enable Switch (SW7)

SW7 Position	DAI Pin	Peripheral	Peripheral Net	Switch Setting (Default)
SW7.1	DAI_P17	LEDs	LED8	ON
SW7.2	DAI_P18	S/PDIF	SPDIF_IN	ON
SW7.3	DAI_P19	Push buttons	PB3	ON
SW7.4	DAI_P20	Push buttons	PB4	ON

Programmable Flag Push Buttons (SW8–11)

Four momentary push buttons (SW8–11) are provided for general-purpose user input. The buttons are connected to the GPIO pins of the processor. The push buttons are active high and, when pressed, send a high (1) to the processor. Switches SW7 and SW13 disconnect the push buttons from the responding signals. Refer to "DAI [17–20] Enable Switch (SW7)" on page 2-11 and "External Port Enable Switch (SW13)" on page 2-12 for more information.

Reset Push Button (SW12)

The reset push button (SW12) resets the following ICs:

- ADSP-21489 processor (U1)
- AD1939 audio codec (U45)
- Parallel flash memory (U18)

The reset also is linked to the expansion II interface; any daughter card connected to the expansion interface that requires a reset can use SW12.

The reset push button does not reset the standalone debug agent once the debug agent is connected to a personal computer (PC). After communication between the debug agent and PC is initialized, pushing a reset button does not reset the USB chip on the debug agent. The only way to reset the USB chip on the debug agent is to power down the EZ-Board.

External Port Enable Switch (SW13)

The external port enable switch (SW13) disconnects the control pins of the processor from the associated peripherals on the EZ-Board and allows the

respective control signals to be used on the expansion II interface. See Table 2-10.

Table 2-10. External Port Enable Switch (SW13)

SW13 Position	Processor Pin	Peripheral	Peripheral Net	Switch Setting (Default)
SW13.1	MS0	SDRAM	SDRAM_CS	ON
SW13.2	MS1	Parallel flash memory	FLASH_CS	ON
SW13.3	FLAG0/IRQ0	Temp sensor	TEMP_IRQ	OFF
SW13.4	FLAG1/IRQ1	Push buttons	PB1	ON
SW13.5	FLAG2/IRQ2/MS2	Push buttons	PB2	ON
SW13.6	FLAG3/TIMEXP/MS3	Temp sensor	TEMP_THERM	OFF
SW13.7	FLAG3/TIMEXP/MS3	SRAM	SRAM_CS	ON
SW13.8	WDTRSTO (Watch Dog Rest Out)	Reset Supervisory IC	WDTRSTO	OFF

DPI [9–14] Enable Switch (SW14)

The DPI [9–14] enable switch (SW14) disconnects DPI pins nine through 14 on the processors from the associated peripherals on the EZ-Board and allows the DPI signals to be used on the expansion II interface. See Table 2-11.

Table 2-11. DPI [9–14] Enable Switch (SW14)

SW14 Position	DPI Pin	Peripheral	Peripheral Net	Switch Setting (Default)
SW14.1	DPI_P9	UART	UART_TX	ON
SW14.2	DPI_P10	UART	UART_RX	ON
SW14.3	DPI_P11	UART	UART_RTS	OFF
SW14.4	DPI_P12	UART	UART_CTS	OFF

Table 2-11. DPI [9–14] Enable Switch (SW14) (Cont'd)

SW14 Position	DPI Pin	Peripheral	Peripheral Net	Switch Setting (Default)
SW14.5	DPI_P13	LEDs	LED2	ON
SW14.6	DPI_P14	LEDs	LED3	ON

Audio In1 Left Selection Switch (SW15)

The audio selection switch (SW15) connects the left channel of the In1 line, connected to the AD1939's ADC1 circuit, to either the single-ended RCA connectors or the differential DB25 connector. By default, SW15 is set up to use the RCA connectors. To use the standard, off the shelf DB25 connector to XLR cables, change the switch to the differential setting. See Table 2-12. For more information, see "Differential In/Out Connectors (P8–9)" on page 2-28.

Table 2-12. Audio In1 Left Selection Switch (SW15)

SW15 Position	Single-Ended RCA IN (Default)	Differential DB25 IN (P8)
SW15.1	ON	OFF
SW15.2	OFF	ON
SW15.3	ON	OFF
SW15.4	OFF	ON
SW15.5	ON	OFF
SW15.6	OFF	ON

Audio In1 Right Selection Switch (SW16)

The audio selection switch (SW16) connects the right channel of the In1 line, connected to the AD1939's ADC2 circuit, to either the single-ended RCA connectors or the differential DB25 connector. By default, the switch is set up to use the RCA connectors for audio in. To use the stan-

dard, off the shelf DB25 connector to XLR cables, change the switch to the differential setting. See Table 2-13. For more information, see “Differential In/Out Connectors (P8–9)” on page 2-28.

Table 2-13. Audio In1 Right Selection Switch (SW16)

SW16 Position	Single-Ended RCA IN (Default)	Differential DB25 IN (P8)
SW16.1	ON	OFF
SW16.2	OFF	ON
SW16.3	ON	OFF
SW16.4	OFF	ON
SW16.5	ON	OFF
SW16.6	OFF	ON

Audio In2 Right Selection Switch (SW17)

The audio selection switch (SW17) connects the right channel of the In2 line, connected to the AD1939’s ADC4 circuit, to either the single-ended RCA connectors or the differential DB25 connector. By default, the switch is set up to use the RCA connectors for audio in. To use the standard, off the shelf DB25 connector to XLR cables, change the switch to the differential setting. See Table 2-14. For more information, see “Differential In/Out Connectors (P8–9)” on page 2-28.

Table 2-14. Audio In2 Right Selection Switch (SW17)

SW17 Position	Single Ended Use RCA IN (Default)	Differential DB25 IN (P8)
SW17.1	ON	OFF
SW17.2	OFF	ON
SW17.3	ON	OFF
SW17.4	OFF	ON

Table 2-14. Audio In2 Right Selection Switch (SW17) (Cont'd)

SW17 Position	Single Ended Use RCA IN (Default)	Differential DB25 IN (P8)
SW17.5	ON	OFF
SW17.6	OFF	ON

Audio In2 Left Selection Switch (SW18)

The audio selection switch (SW18) connects the left channel of the In2 line, connected to the AD1939's ADC3 circuit, to either the single-ended RCA connectors or the differential DB25 connector. By default, the switch is set up to use the RCA connectors for audio in. To use the standard, off the shelf DB25 connector to XLR cables, change the switch to the differential setting. See Table 2-15. For more information, see "Differential In/Out Connectors (P8–9)" on page 2-28.

Table 2-15. Audio In2 Left Selection Switch (SW18)

SW18 Position	Single Ended RCA IN (Default)	Differential DB25 IN (P8)
SW18.1	ON	OFF
SW18.2	OFF	ON
SW18.3	ON	OFF
SW18.4	OFF	ON
SW18.5	ON	OFF
SW18.6	OFF	ON

JTAG Switches (SW19–22)

The JTAG switches (SW19, SW20, SW21, and SW22) select between a single-processor (one EZ-Board) and multi-processor (more than one EZ-Board) configurations. By default, the four DIP switches are set up for a single EZ-Board configuration. See Table 2-16.

The default configuration applies to either a debug agent or an external emulator, such as the Analog Devices high-performance USB-based emulator (HP-USB ICE for short). To use an external emulator and multiple EZ-Boards simultaneously in one VisualDSP++ multi-processor session, set up the boards as shown in Table 2-17. Attach the boards to each other via connectors J3 and P12. For two EZ-Boards, no external cables are required. For three or more EZ-Boards, obtain Samtec JTAG cables described in "MP JTAG Connector (J3)" on page 2-25 and "MP JTAG Out Connector (P12)" on page 2-28.

Table 2-16. Single-Processor Configuration

Switch Position	Single EZ-Board Use (Default)
SW19.1	ON
SW19.2	OFF
SW19.3	ON
SW19.4	OFF
SW19.5	ON
SW19.6	OFF
SW19.7	ON
SW19.8	OFF
SW20.1	ON
SW20.2	OFF
SW21.1	ON
SW21.2	OFF
SW22.1	OFF
SW22.2	OFF

Table 2-17. Multiple-Processor Configuration

Switch Position	Main EZ-Board Attached to Emulator	EZ-Board(s) Not Attached to Emulator
SW19.1	ON	OFF
SW19.2	ON	ON
SW19.3	ON	OFF
SW19.4	ON	ON
SW19.5	ON	OFF
SW19.6	ON	ON
SW19.7	ON	OFF
SW19.8	ON	ON
SW20.1	ON	OFF
SW20.2	OFF	OFF
SW21.1	OFF	OFF
SW21.2	ON	ON
SW22.1	OFF	ON
SW22.2	ON	OFF

Headphone Enable Switch (SW23)

The headphone enable switch (SW23) connects the AD1939's OUT3 circuit to the 3.5 mm headphone connector (J8). By default, the headphone enable switch is disabled. To use the headphones, set SW23 to all ON. For more information, see "Headphone Out Connector (J8)" on page 2-27.

Audio Loopback Switches (SW24–25)

The audio loopback switches (SW24 and SW25) are used for testing only. The switches loop back any analog signal generated from the AD1939's digital-to-analog converter (DAC) circuit to analog-to-digital converter (ADC) circuit.

Jumpers

This section describes functionality of the configuration jumpers. Figure 2-3 shows the jumper locations.

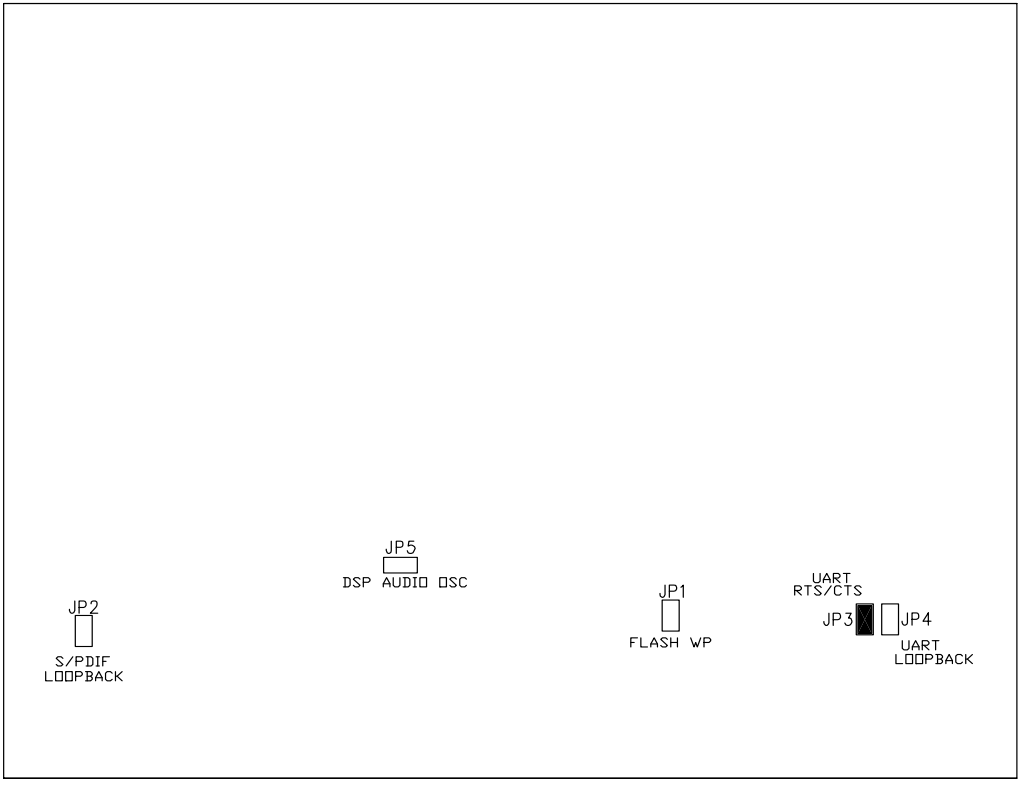

Figure 2-3. Configuration Jumper Locations

Flash WP Jumper (JP1)

The flash WP jumper (JP1) write-protects block 0 of the parallel flash chip. Block 0 is located at address range 0x0400 0000-0x0400 1FFF. The POST begins at block 0 and continues on to other blocks in flash memory. When the jumper is installed on JP1, and the parallel flash driver from Analog Devices is used, block 0 is read-only. By default, JP1 is not installed.

S/PDIF Loopback Jumper (JP2)

The S/PDIF loop back jumper (JP2) is used for internal testing only. The jumper loops back any digital audio signal from the S/PDIF's Data Out pin to the S/PDIF's Data In pin. By default, JP2 is not installed.

UART RTS/CTS Jumper (JP3)

The UART RTS/CTS jumper (JP3) connects the RTS and CTS pins of the RS-232 interface. By default, JP3 is installed.

UART Loopback Jumper (JP4)

The UART loop back jumper (JP4) is used for internal testing only. The jumper loops back UART receive data from UART transmit data. By default, JP4 is not installed.

DSP Audio Oscillator Jumper (JP5)

The processor audio oscillator jumper (JP5) connects a 24.576 MHz oscillator to the DAI_P17 pin of the processor. JP5 enables the processor control of the serial port signals connected to the AD1939 audio codec via the oscillator. The jumper can be used to make the processor the master and the AD1939 device—the slave. By default, JP5 is not installed, resulting in the AD1939 being the master, and the processor being the slave.

LEDs

This section describes the on-board LEDs. Figure 2-4 shows the LED locations.

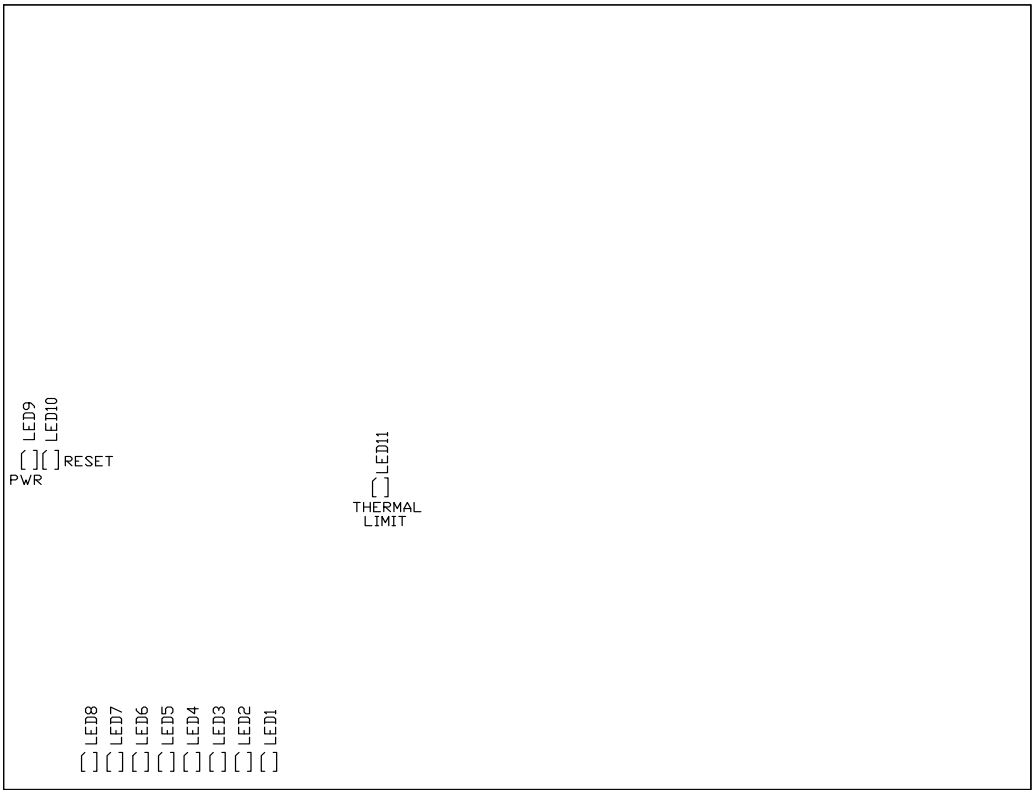

Figure 2-4. LED Locations

GPIO LEDs (LED1–8)

Eight LEDs (LED1-8) are connected to DAI and DPI pins of the processor. See Table 2-18. The LEDs are active high and lit by writing a '1' to the correct DAI or DPI pin.

Table 2-18. GPIO LEDs

LED Reference Designator	Processor Pin
LED1	DPI_P6
LED2	DPI_P13
LED3	DPI_14
LED4	DAI_P3
LED5	DAI_P4
LED6	DAI_P15
LED7	DAI_P16
LED8	DAI_P17

Power LED (LED9)

When LED9 is lit solid, it indicates that the board is powered.

Reset LED (LED10)

When LED10 is lit, it indicates that a master reset of all major ICs is active. The reset LED is controlled by the Analog Devices ADM708 supervisory reset circuit. You can assert the reset push button (SW12) to assert a master reset and activate LED10. The reset also is controlled by the watch dog reset out pin of the processor. Switch SW13 position 8 must be enabled for the watch dog reset. For more information, see "Watch Dog Timer Interface" on page 1-12.

Thermal Limit LED (LED11)

The thermal limit LED (LED11) reports a status of the thermal sensor, ADM1032 (U43). The thermal sensor monitors the processor's temperature. When the high temperature limit set by the IC is violated, LED11 is turned on as a visual indicator. The ADM1032 has built-in hysteresis, which causes the LED to de-activate only when the temperature is significantly within the limit. For more information, see "Temperature Sensor Interface" on page 1-13.

Connectors

This section describes connector functionality and provides information about mating connectors. The connector locations are shown in Figure 2-5.

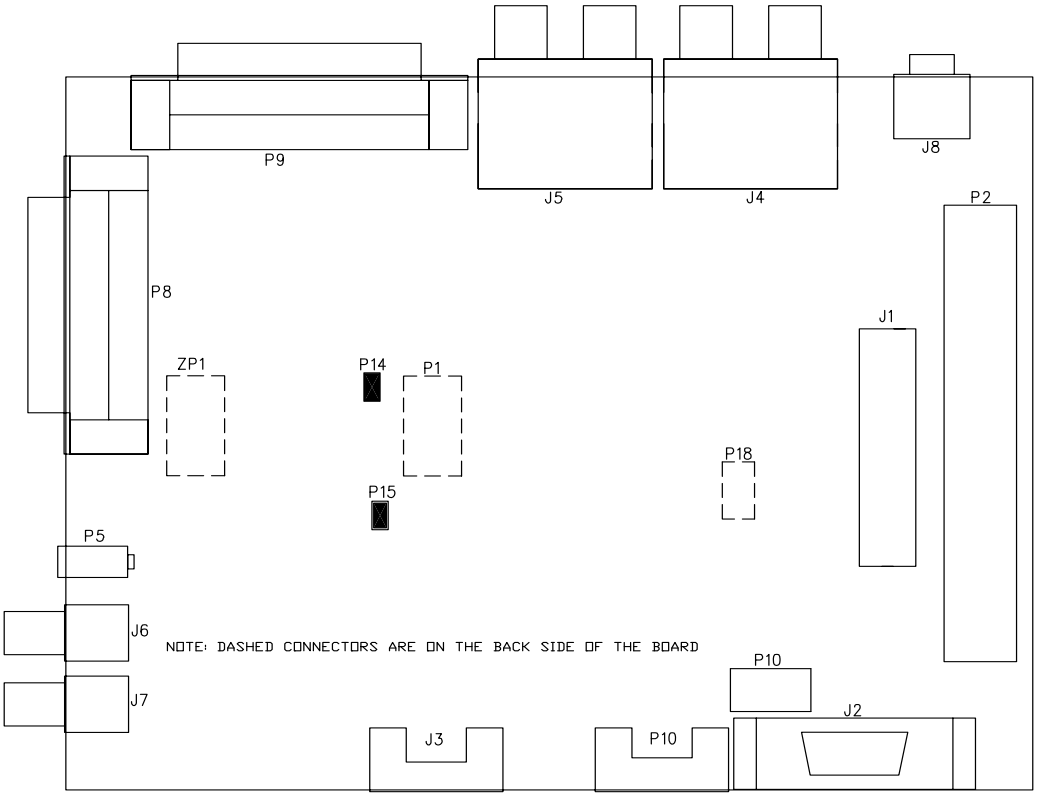

Figure 2-5. Connector Locations

Expansion Interface II Connector (J1)

J1 is a board-to-board connector providing signals from the asynchronous memory interface (AMI) of the processor. The connector is located on the right edge of the board. For more information, see "Expansion Interface II" on page 1-20. For availability and pricing of the connector, contact Samtec.

Part Description	Manufacturer	Part Number
104-position 0.025", SMT header	SAMTEC	QMS-052-06.75-L-D-A
Mating Connector		
104-position 0.025", SMT socket	SAMTEC	QFS-052-04.25-L-D-A

RS-232 Connector (J2)

Part Description	Manufacturer	Part Number
DB9, female, vertical mount	NORCOMP	191-009-213-L-571
Mating Cable		
2m female-to-female cable	DIGI-KEY	AE1020-ND

MP JTAG Connector (J3)

Part Description	Manufacturer	Part Number
ERF8 10 x 2, RA female	SAMTEC	ERF8-010-01-S-D-RA-L
Mating Cable		
6" cable ERF8 to ERM8 10 x 2	SAMTEC	ERCD-010-06.00-TBL-SBR-1

RCA Audio Connector (J4)

Part Description	Manufacturer	Part Number
RCA 2 x 3	KYOYAKU ENT	WSP-256V1-09
Mating Cable (shipped with the EZ-Board)		
6' RCA audio cable	CABLESTOGO	03171

RCA Audio Connector (J5)

Part Description	Manufacturer	Part Number
RCA 2 x 3	KYOYAKU ENT	WSP-256V1-09
Mating Cable (shipped with the EZ-Board)		
6' RCA audio cable	CABLESTOGO	03171

S/PDIF In Connector (J6)

Part Description	Manufacturer	Part Number
RCA 1 x 1	SWITCHCRAFT	PJRAN1X1U01X
Mating Cable (shipped with the EZ-Board)		
6' RCA audio cable	CABLESTOGO	03171

S/PDIF Out Connector (J7)

Part Description	Manufacturer	Part Number
RCA 1 x 1	SWITCHCRAFT	PJRAN1X1U01X
Mating Cable (shipped with the EZ-Board)		
6' RCA audio cable	CABLESTOGO	03171

Headphone Out Connector (J8)

Part Description	Manufacturer	Part Number
3.5 mm stereo jack	CUI	SJ1-3525NG
Mating Headphones (shipped with the EZ-Board)		
Stereo headphones	KOSS	151225 UR5

JTAG Connector (P1)

The P1 connector provides access to the JTAG signals of the ADSP-21489 processor. The standalone debug agent requires two connectors, P1 and ZP1. Pin 3 is missing to provide keying. Pin 3 in the mating connector must have a plug. For more information, see "JTAG Interface" on page 1-19.

Remove the standalone debug agent when an emulator is used with the EZ-Board. Follow the installation instructions provided in "EZ-Board Installation" on page 1-5, using P1 as the JTAG connection point.

Expansion Interface II Connector (P2)

P2 is a board-to-board connector providing signals for the DAI and DPI interfaces and GPIO signals of the processor. The connector is located on the right edge of the board. For more information, see "Expansion Interface II" on page 1-20. For availability and pricing of the connectors, contact Samtec.

Part Description	Manufacturer	Part Number
60-position 0.1", SMT header	SAMTEC	TSSH-130-01-L-DV-A
Mating Connector		
60-position 0.1", SMT socket	SAMTEC	SSW-130-22-F-D-VS

Differential In/Out Connectors (P8–9)

The differential in and out connectors (P8-9) are intended for an evaluation of the AD1939 codec via XLR connectors. A standard, off the shelf DB25 connector to XLR cables is required; the cable details can be found in the following table.

Part Description	Manufacturer	Part Number
25-position DB25 socket	TYCO	1734350-2
Mating Cables		
Snake (8)XLRF-25P 9.9'	HOSA	DTF-803
Snake (8)XLRM-25P 9.9'	HOSA	DTM-803

MP JTAG Out Connector (P12)

Part Description	Manufacturer	Part Number
ERM8 10 x 2, RA male	SAMTEC	ERM8-010-01-S-D-RA
Mating Cable		
6" cable ERF8 to ERM8 10 x 2	SAMTEC	ERCD-010-06.00-TBL-SBR-1

VDDINT Power Connector (P14)

The VDDINT power connector (P14) is used to measure voltage and current supplied to the processor core. By default, P14 is ON, and the power flows through the two-pin IDC header. To measure power, remove the jumper on P14 and measure voltage across the 0.1 ohm resistor. Once voltage is measured, power can be calculated. For more information, refer to "Power Measurements" on page 1-21.

VDDEXT Power Connector (P15)

The VDDEXT power connector (P15) is used to measure the processor's I/O voltage and current. By default, P15 is ON, and the power flows through the two-pin IDC header. To measure power, remove the jumper on P15 and measure voltage across the 0.1 ohm resistor. Once voltage is measured, power can be calculated. For more information, refer to "Power Measurements" on page 1-21.

Power Connector (P16)

The power connector (P16) provides all of the power necessary to operate the EZ-Board.

Part Description	Manufacturer	Part Number
0.65 mm power jack	CUI	045-0883R
Mating Power Supply (shipped with the EZ-Board and EZ-KIT Lite)		
5.0VDC@3.6A power supply	GLOBTEK	GS-1750(R)

Standalone Debug Agent Connector (ZP1)

ZP1 connects the standalone debug agent to the EZ-Board. The standalone debug agent requires two connectors, ZP1 and P1. For more information, see "JTAG Connector (P1)" on page 2-27.

A ADSP-21489 EZ-BOARD BILL OF MATERIALS

The bill of materials corresponds to "ADSP-21489 EZ-Board Schematic" on page B-1.

Ref.	Qty.	Description	Reference Designator	Manufacturer	Part Number
1	1	74LVC14A SOIC14	U14	TI	74LVC14AD
2	1	IDT74FCT3244APY SSOP20	U17	IDT	IDT74FCT3244APYG
3	1	12.288MHZ OSC003	U12	EPSON	SG-8002CA MP
4	1	25MHZ OSC003	U7	EPSON	SG-8002CA MP
5	4	SN74LVC1G08 SOT23-5	U9,U13,U27,U41	TI	SN74LVC1G08DBVR
6	1	24.576MHZ OSC003	U39	EPSON	SG-8002CA MP
7	1	SN65LVDS2D SOIC8	U11	NATIONAL SEMI	DS90LV018ATM
8	1	M25P16 SO8W	U6	NUMONYX	M25P16-VMW6G
9	1	ADM1032 SOIC_N8	U5	ON SEMI	ADM1032ARZ
10	2	SI7601DN ICS010	U15-16	VISHAY	SI7601DN
11	1	MT48LC16M16A2 TSOP54	U2	MICRON	MT48LC16M16A2P-6A:D
12	1	IS61WV102416BLL TSOP48	U3	ISSI	IS61WV102416BLL-10TLI

Ref.	Qty.	Description	Reference Designator	Manufacturer	Part Number
13	1	2MHz OSC015	U40	MURATA	CSTCC2M00G56-R0(2MHz)
14	1	21489 M29W320EB “U4”	U4	NUMONYX	M29W320EB70ZE6E
15	1	ADM708SARZ SOIC8	U18	ANALOG DEVICES	ADM708SARZ
16	1	ADM3202ARNZ SOIC16	U8	ANALOG DEVICES	ADM3202ARNZ
17	1	ADSP-21489 LQFP176_EP	U1	ANALOG DEVICES	ADSP-21489KSWZENGB
18	2	ADP1864AUJZ SOT23-6	VR2-3	ANALOG DEVICES	ADP1864AUJZ-R7
19	1	ADP1710 TSOT5	VR1	ANALOG DEVICES	ADP1710AUJZ-R7
20	1	AD1939 LQFP64	U19	ANALOG DEVICES	AD1939YSTZ
21	16	AD8652ARZ SOIC_N8	U20-26,U28-30, U32-34,U36-38	ANALOG DEVICES	AD8652ARZ
22	1	AD8397 SOIC_N8_EP	U31	ANALOG DEVICES	AD8397ARDZ-REEL7
23	1	ADM1085 SC70_6	U35	ANALOG DEVICES	ADM1085AKSZ-REEL7
24	2	RCA 1X1 CON012	J6-7	SWITCH-CRAFT	PJRAN1X1U01X
25	5	MOMENTARY SWT013	SW8-12	PANASONIC	EVQ-PAD04M
26	5	DIP8 SWT016	SW1-3,SW13, SW19	C&K	TDA08H0SB1
27	5	DIP6 SWT017	SW14-18	CTS	218-6LPST
28	3	DIP4 SWT018	SW7,SW24-25	ITT	TDA04HOSB1

Ref.	Qty.	Description	Reference Designator	Manufacturer	Part Number
29	1	DB9 9PIN CON038	J2	NORCOMP	191-009-213-L-571
30	5	DIP2 SWT020	SW5,SW20-23	C&K	CKN9064-ND
31	5	IDC 2X1 IDC2X1	JP1-5	FCI	90726-402HLF
32	2	IDC 2X1 IDC2X1	P14-15	FCI	90726-402HLF
33	2	IDC 2PIN_JUMPER_SHORT	SJ2-3	DIGI-KEY	S9001-ND
34	1	3.5MM STEREO_JACK CON001	J8	DIGI-KEY	CP1-3525NG-ND
35	1	PWR .65MM CON045	P16	DIG	CP1-023-ND
36	1	5A RESETABLE FUS005	F1	MOUSER	650-RGEF500
37	1	QMS 52x2 QMS52x2_SMT	J1	SAMTEC	QMS-052-06.75-L-D-A
38	1	IDC 7x2 IDC7x2_SMTA	P1	SAMTEC	TSM-107-01-T-DV-A
39	1	ROTARY SWT027	SW4	COPAL	S-8110
40	2	RCA 2x3 CON_RCA_6B	J4-5	KYOYAKU ENT.	WSP-256V1-09H
41	1	ERM8 10X2 ERM8_10X2_SMT	P12	SAMTEC	ERM8-010-01-S-D-RA-TR
42	1	ERF8 10X2 ERF8_10X2_SMT	J3	SAMTEC	ERF8-010-01-S-D-RA-L
43	2	DB25 25PIN DB25F	P8-9	TYCO	1734350-2
44	1	IDC 30x2 IDC30X2_SMTA	P2	SAMTEC	TSSH-130-01-L-DV-A

Ref.	Qty.	Description	Reference Designator	Manufacturer	Part Number
45	9	YELLOW LED001	LED1-8,LED11	DIGI-KEY	P512TR-ND
46	2	22PF 50V 5% 0805	C262-263	AVX	08055A220JAT
47	2	0.22UF 25V 10% 0805	C126-127	AVX	08053C224KAT2A
48	1	0.1UF 50V 10% 0805	C123	AVX	08055C104KAT
49	2	600 100MHZ 500MA 1206	FER7-8	STEWARD	HZ1206B601R-10
50	2	10UF 16V 20% CAP002	CT59-60	PANASONIC	EEE1CA100SR
51	1	190 100MHZ 5A FER002	FER9	MURATA	DLW5BSN191SQ2
52	8	10UF 6.3V 10% 0805	C97-98,C100-101,C254,C257,C287-288	AVX	08056D106KAT2A
53	2	4.7UF 6.3V 10% 0805	C240,C246	AVX	08056D475KAT2A
54	31	0.1UF 10V 10% 0402	C117-120,C148,C151-152,C160,C162,C169-170,C178,C188-189,C191,C197,C199-200,C211,C213-214,C225,C227-228,C264,C267-271,C273	AVX	0402ZD104KAT2A
55	73	0.01UF 16V 10% 0402	C45-50,C54-88,C90-91,C96,C99,C102,C121-122,C125,C128-131,C136-142,C266,C274-283,C286,C291	AVX	0402YC103KAT2A

Ref.	Qty.	Description	Reference Designator	Manufacturer	Part Number
56	35	10K 1/16W 5% 0402	R99,R190,R196-200,R202,R205-210,R217,R224-225,R233-239, R256,R259-260, R469,R494,R504-507,R513-514	VISHAY	CRCW040210K0FKED
57	2	4.7K 1/16W 5% 0402	R185,R501	VISHAY	CRCW04024K70JNED
58	5	0 1/16W 5% 0402	R462,R485,R492, R498,R509	PANASONIC	ERJ-2GE0R00X
59	3	22 1/16W 5% 0402	R1-2,R230	PANASONIC	ERJ-2GEJ220X
60	12	33 1/16W 5% 0402	R201,R203,R211, R257-258,R261-263,R495-496, R503,R512	VISHAY	CRCW040233R0JNEA
61	1	100UF 10V 10% C	CT61	AVX	TPSC107K010R0075
62	1	1A SK12 DO-214AA	D4	DIODES INC	B120B-13-F
63	1	107.0 1/10W 1% 0805	R228	DIGI-KEY	311-107CRTR-ND
64	1	249.0 1/10W 1% 0805	R227	DIGI-KEY	311-249CRTR-ND
65	2	0.1UF 16V 10%0603	C255-256	AVX	0603YC104KAT2A
66	2	1UF 16V 10% 0603	C260-261	KEMET	C0603C105K4PACTU
67	2	68PF 50V 5% 0603	C243,C249	AVX	06035A680JAT2A
68	2	470PF 50V 5% 0603	C242,C248	AVX	06033A471JAT2A
69	1	220UF 6.3V 20% D2E	CT45	SANYO	10TPE220ML

Ref.	Qty.	Description	Reference Designator	Manufacturer	Part Number
70	11	330 1/10W 5% 0603	R248-255,R467-468,R497	VISHAY	CRCW0603330RJNEA
71	2	0 1/10W 5% 0603	R452,R458	PHYCOMP	232270296001L
72	4	10 1/10W 5% 0603	R244-247	VISHAY	CRCW060310R0JNEA
73	1	10.0K 1/16W 1% 0603	R231	DALE	CRCW060310K0FKEA
74	8	237.0 1/10W 1% 0603	R267,R272,R280,R285,R293,R298-299,R304	DIGI-KEY	311-237HRTR-ND
75	24	49.9K 1/10W 1% 0603	R265,R271,R282,R284,R295,R297,R300,R302,R310,R336-337,R343-344,R363-364,R369,R378,R397-398,R403,R412,R431-432,R437	DIGI-KEY	311-49.9KHRTR-ND
76	1	75.0 1/10W 1% 0603	R229	DALE	CRCW060375R0FKEA
77	4	1UF 6.3V 20% 0402	C132-135	PANASONIC	ECJ-0EB0J105M
78	4	100 1/16W 5% 0402	R240-243	DIGI-KEY	311-100JRTR-ND
79	1	562.0 1/10W 1% 0603	R461	VISHAY	CRCW0603562RFKEA
80	1	390PF 25V 5% 0603	C258	AVX	06033A391FAT2A
81	1	5600PF 16V 5% 0805	C259	AVX	0805YA562JAT2A
82	1	15.0K 1/16W 1% 0603	R232	DIGI-KEY	311-15.0KHRTR-ND

Ref.	Qty.	Description	Reference Designator	Manufacturer	Part Number
83	40	4.99K 1/16W 1% 0603	R264,R273,R278-279,R291-292, R305-306,R311, R313-314,R324, R326-328,R342, R349-350,R352-354,R357,R366, R371,R383-384, R386-388,R391, R400,R405,R417-418,R420-422, R425,R434,R439	VISHAY	CRCW06034K99FKEA
84	2	24.9K 1/10W 1% 0603	R448,R454	DIGI-KEY	311-24.9KHTR-ND
85	1	31.6K 1/16W 1% 0603	R473	PANASONIC	ERJ-3EKF3162V
86	2	10UF 10V 10% 0805	C161,C265	PANASONIC	ECJ-2FB1A106K
87	8	5.76K 1/16W 1% 0603	R266,R269,R277, R281,R290,R294, R303,R307	PANASONIC	ERJ-3EKF5761V
88	2	0.05 1/2W 1% 1206	R459-460	SEI	CSF 1/2 0.05 1%R
89	3	10UF 16V 10% 1210	C244-245,C250	AVX	1210YD106KAT2A
90	1	GREEN LED001	LED9	PANASONIC	LN1361CTR
91	1	RED LED001	LED10	PANASONIC	LN1261CTR
92	2	1000PF 50V 5% 1206	C236,C251	AVX	12065A102JAT2A
93	1	255.0K 1/10W 1% 0603	R447	VISHAY	CRCW06032553FK
94	2	80.6K 1/10W 1% 0603	R449,R455	DIGI-KEY	311-80.6KHRCT-ND

Ref.	Qty.	Description	Reference Designator	Manufacturer	Part Number
95	3	5A MBRS540T3G SMC	D1-3	ON SEMI	MBRS540T3G
96	2	2.5UH 30% IND013	L1-2	COILCRAFT	MSS1038-252NLB
97	1	1.0K 1/16W 1% 0402	R287	PANASONIC	ERJ-2RKF1001X
98	1	8.20K 1/10W 1% 0603	R502	DIGI-KEY	541-8.20KHCT-ND
99	6	10.0K 1/16W 1% 0402	R474,R486-488, R491,R499	DIGI-KEY	541-10.0KLCT-ND
100	10	100K 1/16W 5% 0402	R475-484	DIGI-KEY	541-100KJTR-ND
101	1	30.9K 1/16W 1% 0402	R453	DIGI-KEY	541-30.9KLCT-ND
102	10	33 1/32W 5% RNS005	RN18,RN26-34	PANASONIC	EXB-28V330JX
103	16	2.67K 1/16W 1% 0402	R316,R318,R322, R338,R367-368, R373,R377,R401-402,R407,R411, R435-436,R441, R445	PANASONIC	ERJ-2RKF2671X
104	30	100.0 1/16W 1% 0402	R274-275,R288, R309,R331-335, R340,R351,R358-362,R385,R392-396,R419,R426-430,R489-490	DIGI-KEY	541-100LCT-ND
105	2	47UF 16V 20% ELEC_6MM	CT57-58	PANASONIC	EEE-FC1C470P
106	4	37.4K 1/16W 1% 0402	R268,R276,R289, R308	DIGI-KEY	541-37.4KLCT-ND

Ref.	Qty.	Description	Reference Designator	Manufacturer	Part Number
107	8	1000PF 50V 5% 0402	C144,C150,C154, C159,C164,C168, C171,C176	DIGI-KEY	490-3244-1-ND
108	4	100pF 50V 5% 0402	C147,C155,C165, C175	MURATA	GCM1555C1H101JZ13 D
109	8	300PF 100V 5% 0603	C143,C145,C153, C157,C163,C173, C177,C179	DIGI-KEY	490-1362-2-ND
110	16	2.43K 1/16W 1% 0402	R315,R319,R323, R325,R346-347, R374-375,R380-381,R408-409, R414-415,R442-443	DIGI-KEY	541-2.43KLCT-ND
111	16	750.0 1/16W 1% 0402	R317,R320-321, R341,R345,R348, R372,R376,R379, R382,R406,R410, R413,R416,R440, R444	DIGI-KEY	541-750LCT-ND
112	16	620PF 50V 5% 0402	C181,C186-187, C192,C194-195, C201,C204,C208-209,C215,C218, C222-223,C229, C232	DIGI-KEY	490-3239-2-ND
113	16	680PF 50V 5% 0402	C182-183,C185, C193,C202-203, C206-207,C216-217,C220-221, C230-231,C234-235	DIGI-KEY	490-3240-1-ND
114	13	22 1/32W 5% RNS005	RN15-17,RN19-21,RN23-25, RN49-52	PANASONIC	EXB-28V220JX

Ref.	Qty.	Description	Reference Designator	Manufacturer	Part Number
115	4	0.036 1/2W 1% 1206	R450-451,R456-457	SUSUMU	RL1632S-R036-F
116	1	470UF 2.5V 20% D2E	CT47	SANYO	2R5TPE470MF
117	40	22UF 6.3V 20% ELEC_4MM	CT1,CT3,CT5-6, CT8-11,CT14, CT16,CT18-19, CT23-24,CT27-28,CT31-32, CT35-36,CT39-40,CT43-44, CT49-56,CT62-69	PANASONIC	EEE-FC0J220R
118	8	22UF 6.3V 20% ELEC_5MM	C180,C184,C196, C205,C210,C219, C224,C233	MOUSER	647-UWP0J220MCL
119	1	5K 1/20W 20% RES_POT_DUAL	R493	PANASONIC	EVJ-Y15F03A53
120	16	6.81K 1/10W 1% 0603	R312,R329-330, R339,R355-356, R365,R370,R389-390,R399,R404, R423-424,R433, R438	DIGI-KEY	311-6.81KHRTR-ND
121	1	806 1/10W 1% 0402	R286	VISHAY	CRCW0402806RFKED
122	1	30A GSOT05 SOT23-3	D6	VISHAY	GSOT05-GS08
123	2	30A GSOT03 SOT23-3	D7,D10	VISHAY	GSOT03-GS08
124	1	7A VESD01-02V-GS08 SOD-52	D9	VISHAY	VESD01-02V-GS08
125	1	16.9K 1/16W 1% 0402	R500	VISHAY	CRCW040216K9FKED

ADSP-21489 EZ-BOARD SCHEMATIC

ANALOG DEVICES
20 Cotton Road
Nashua, NH 03063
PH: 1-800-ANALOGD

Title	ADSP-21489 EZ-BOARD TITLE		
Size C	**Board No.** A0228-2009		**Rev** 0.1B
Date 3-18-2010_13:41		**Sheet** 1 **of** 16	

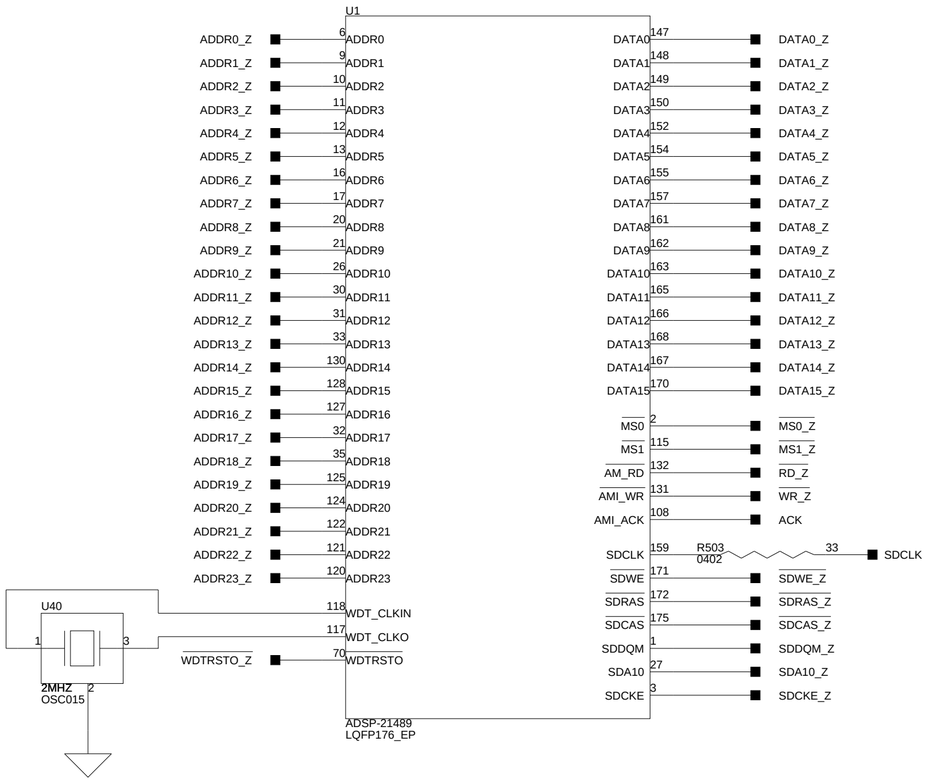

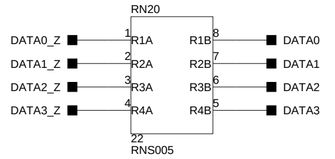

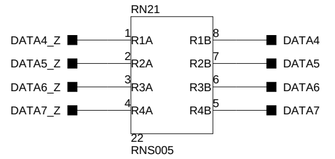

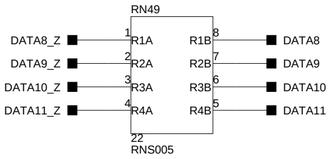

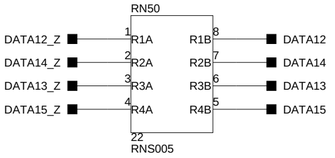

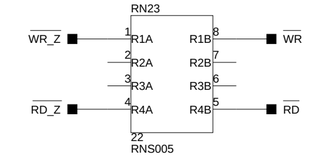

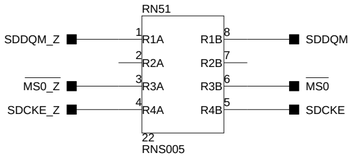

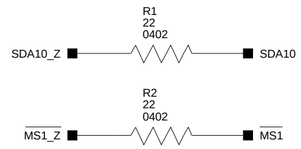

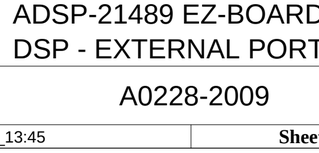

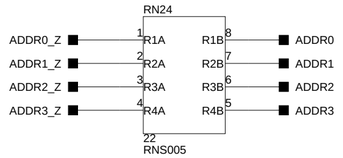

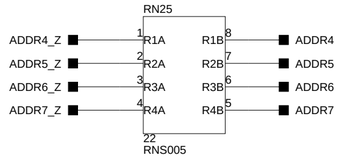

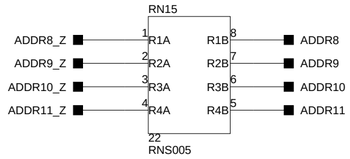

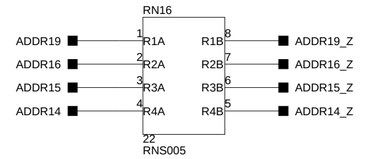

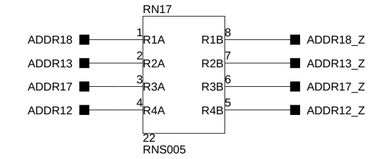

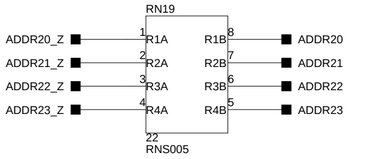

ANALOG DEVICES
20 Cotton Road
Nashua, NH 03063
PH: 1-800-ANALOGD

Title	ADSP-21489 EZ-BOARD DSP - EXTERNAL PORT		
Size C	**Board No.** A0228-2009		**Rev** 0.1B
Date 3-18-2010_13:45		**Sheet** 2 **of** 16	

32MB SDRAM
(4 Mbit X 16 X 4 banks)

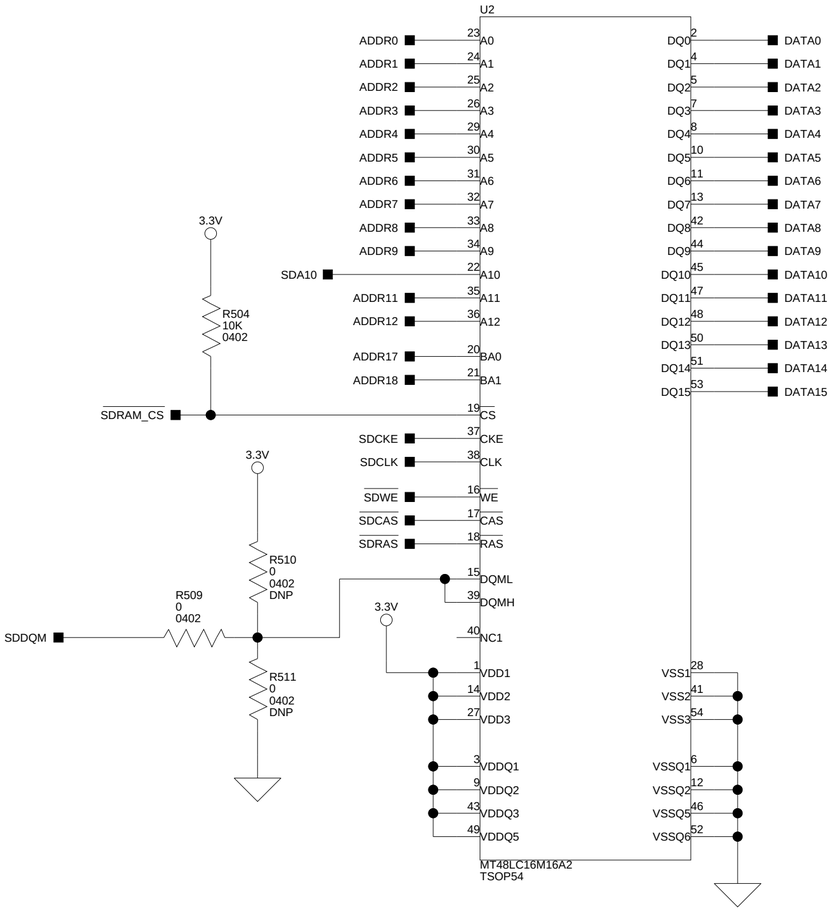

2MB SRAM
(1 Mbit X 16)

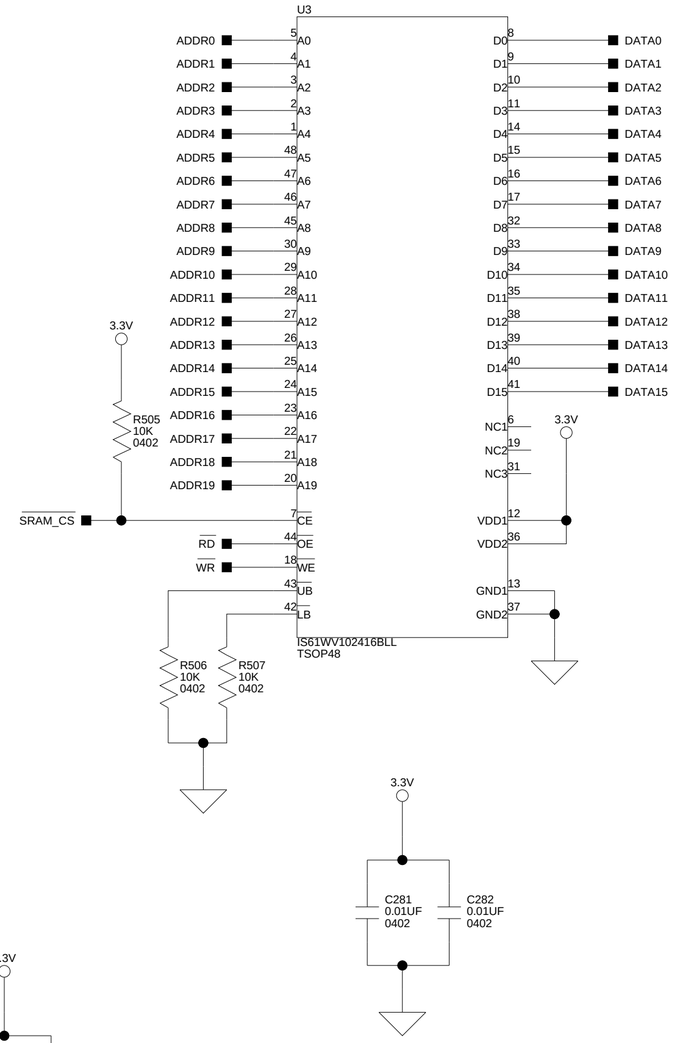

4MB FLASH
(4 Mbit X 8)

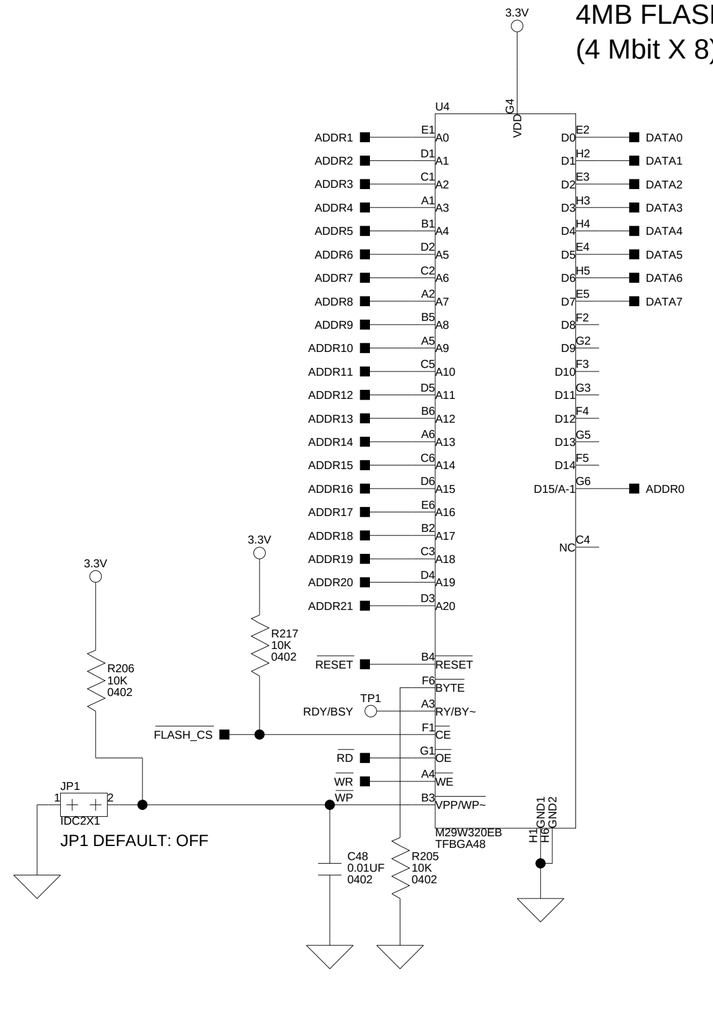

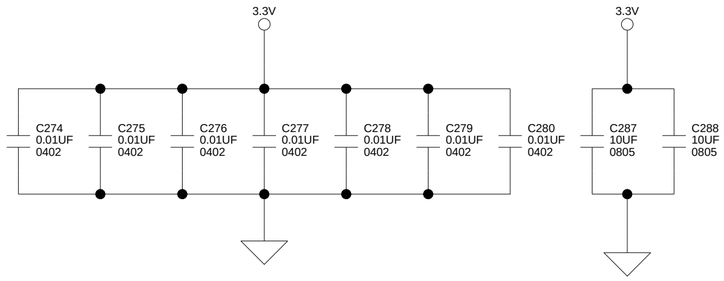

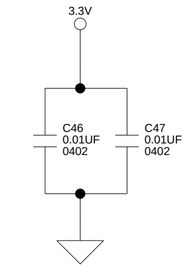

SW13: EXTERNAL PORT ENABLE
DEFAULT: ON ON OFF ON ON OFF ON OFF

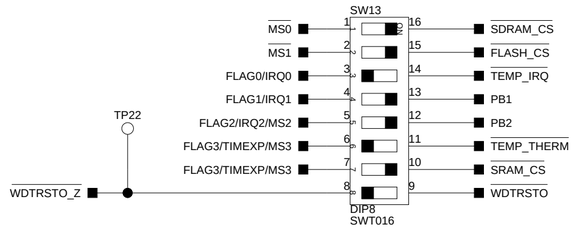

ANALOG DEVICES
20 Cotton Road
Nashua, NH 03063
PH: 1-800-ANALOGD

Title	ADSP-21489 EZ-BOARD MEMORY - PARALLEL	
Size C	**Board No.** A0228-2009	**Rev** 0.1B
Date 3-18-2010_13:45	**Sheet** 3 **of** 16	

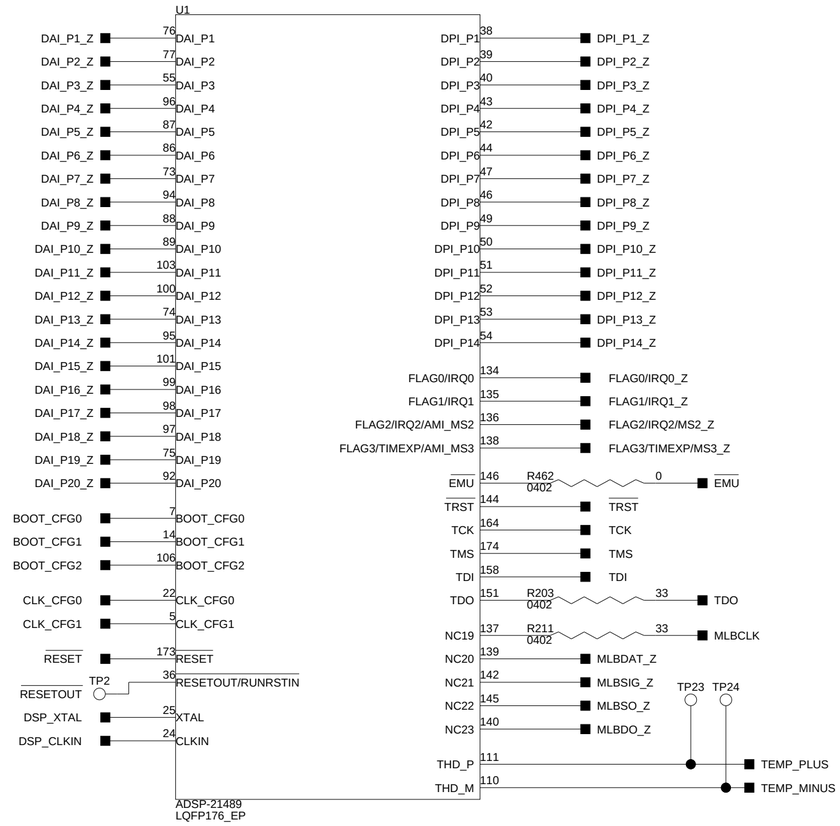

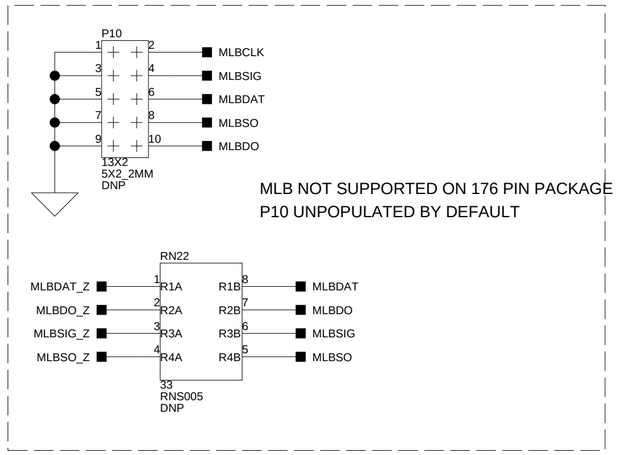

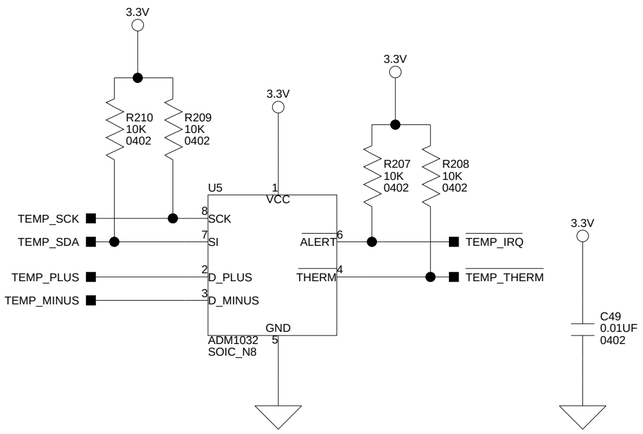

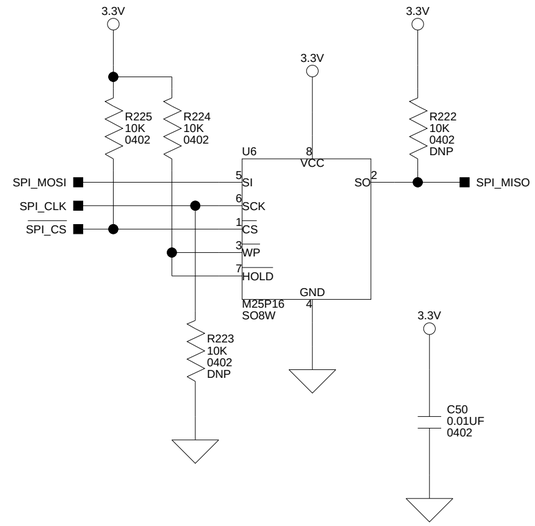

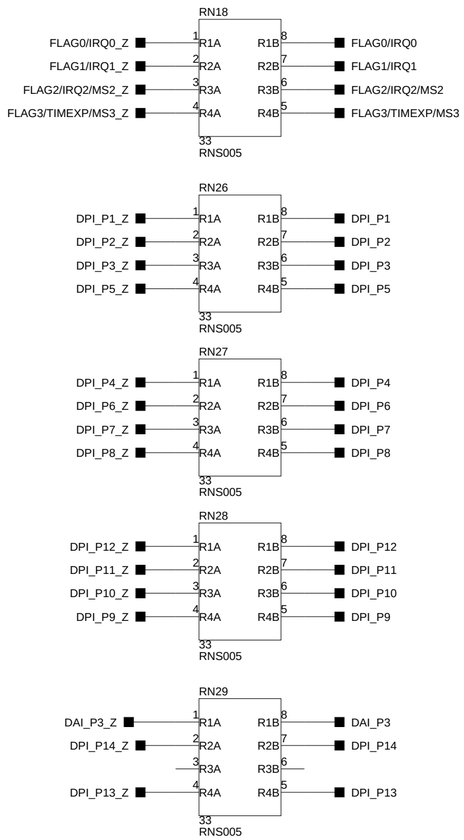

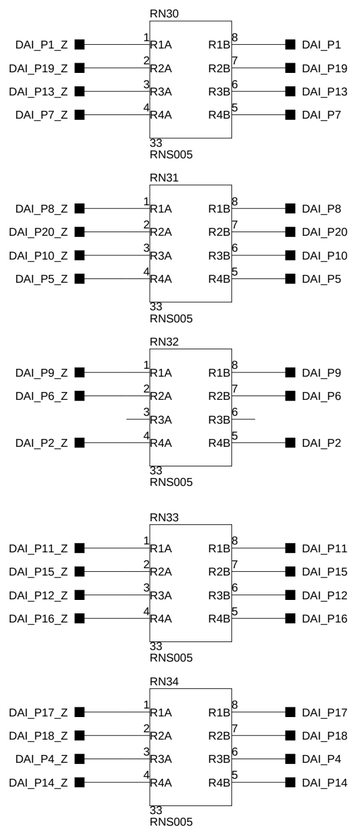

NOTE: SHUTTING OFF DIP SWITCHES SW1, SW2, SW3 SW7, OR SW14 ALLOWS A USER TO USE THESE DAI OR DPI PINS VIA THE EXPANSION II INTERFACE.

SW3: DPI [1-8] ENABLE
DEFAULT: ALL ON

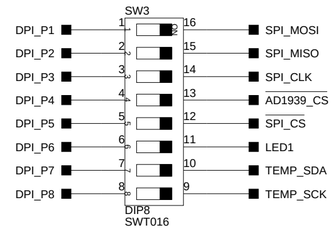

SW14: DPI [9-14] ENABLE
DEFAULT: ALL ON EXCEPT POS 3 & 4 OFF

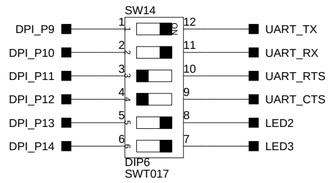

SW1: DAI [1-8] ENABLE
DEFAULT: ALL ON

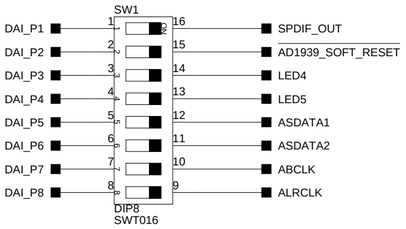

SW2: DPI [9-16] ENABLE
DEFAULT: ALL ON EXCEPT POS. 5 & 6 OFF

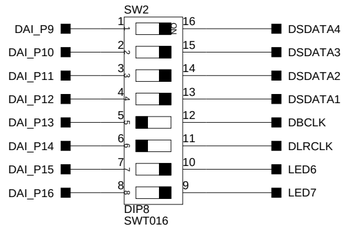

SW7: DPI [17-20] ENABLE
DEFAULT: ALL ON

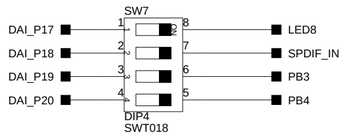

ANALOG DEVICES
20 Cotton Road
Nashua, NH 03063
PH: 1-800-ANALOGD

Title	ADSP-21489 EZ-BOARD DSP - DAI, DPI, MLB INTERFACES		
Size C	Board No. A0228-2009		Rev 0.1B
Date 3-18-2010_13:45		Sheet 4 of 16	

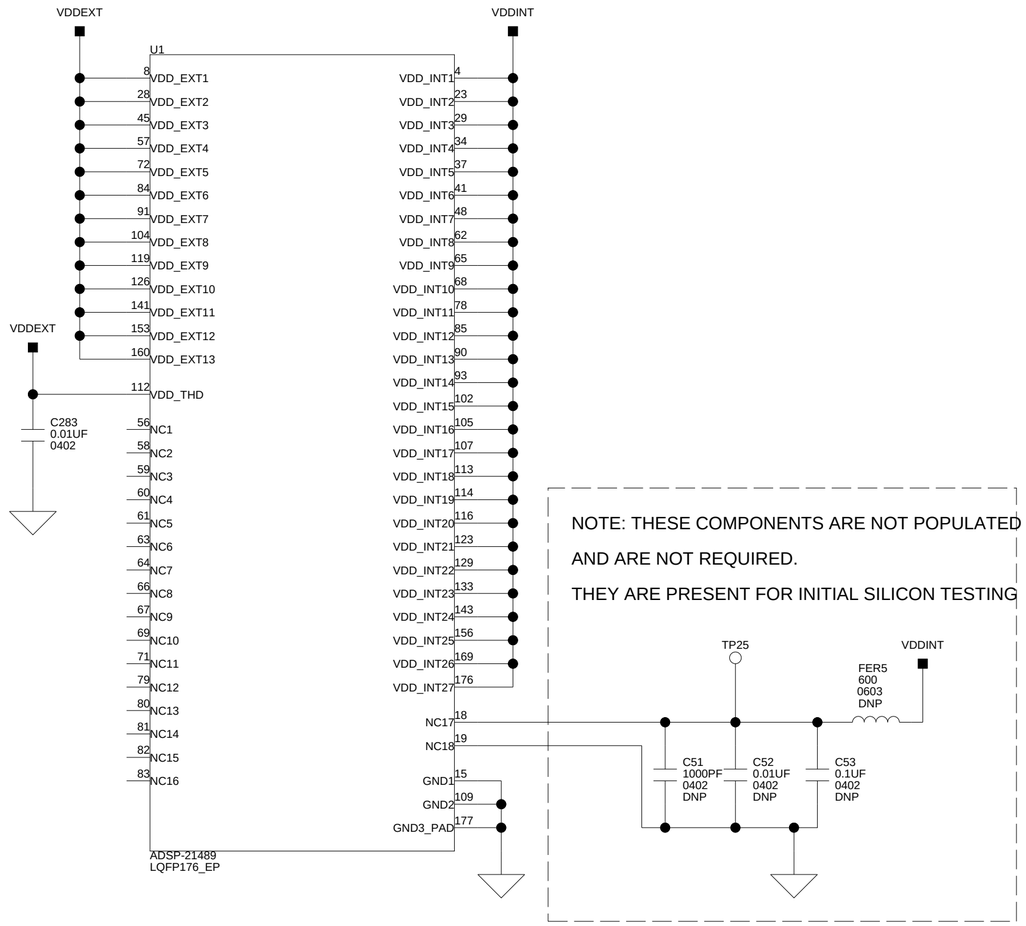

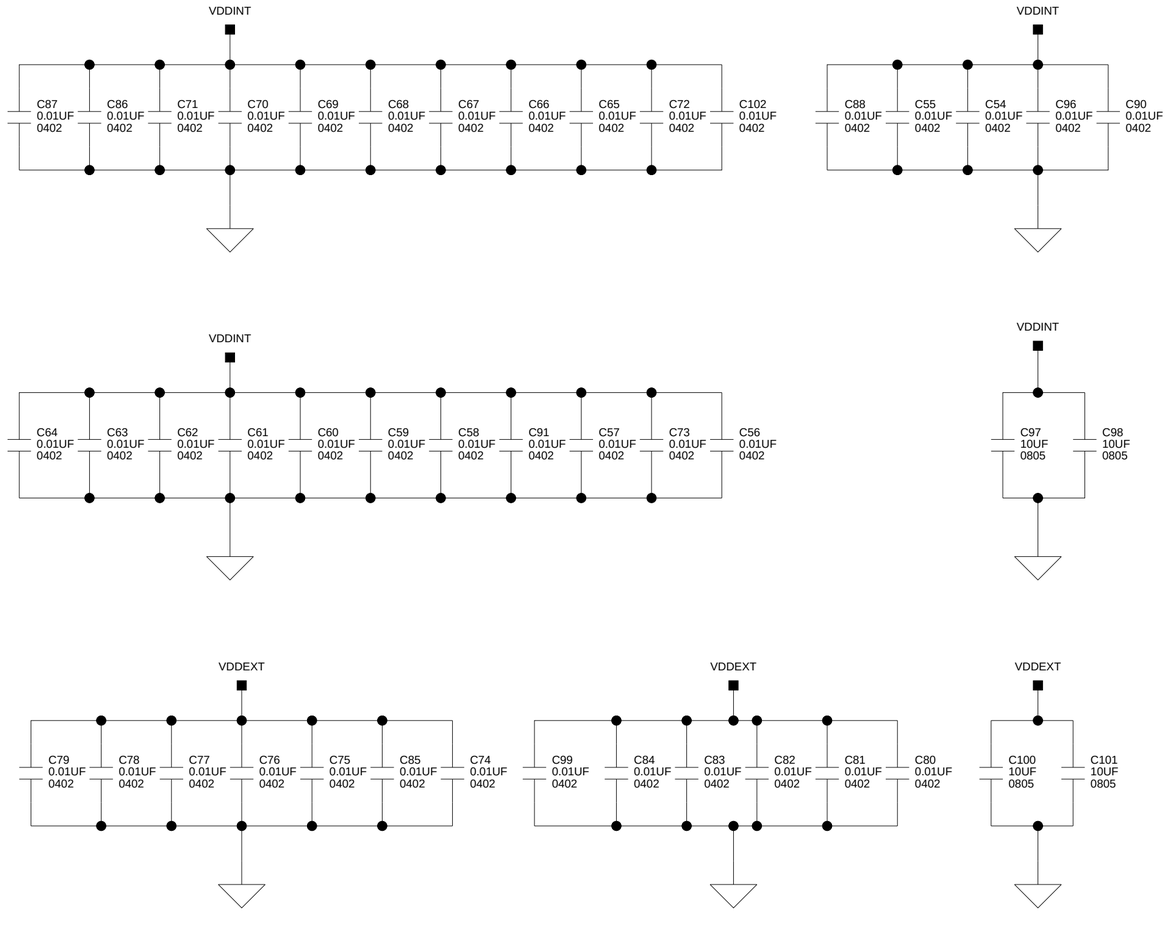

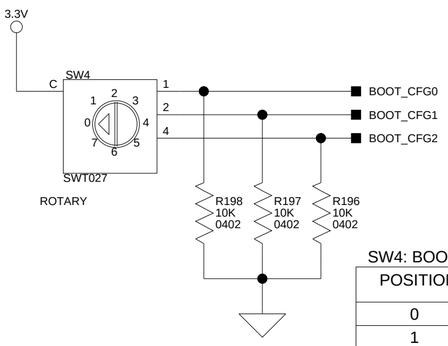

SW4: BOOT MODE SELECT

POSITION	BOOT MODE	
0	SPI Slave Boot	
1	SPI Master Boot	
2	AMI Boot (Parallel Flash)	DEFAULT
3,4,5,6 or 7	Reserved	

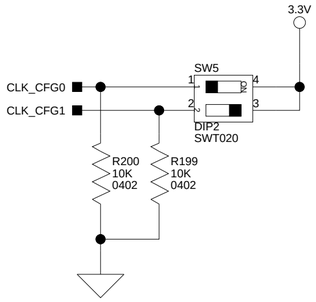

SW5: DSP CLOCK CONFIG

1 CLKCFG0	2 CLKCFG1	CLOCK RATIO CORE:CLKIN	
ON	ON	Reserved	
ON	OFF	32:1	
OFF	ON	16:1	DEFAULT
OFF	OFF	8:1	

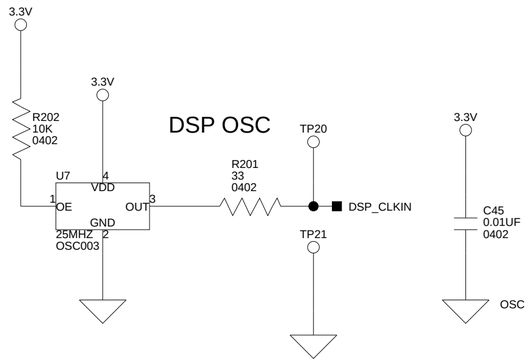

OPTIONAL DSP CRYSTAL

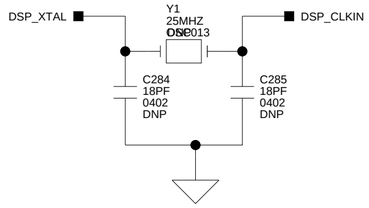

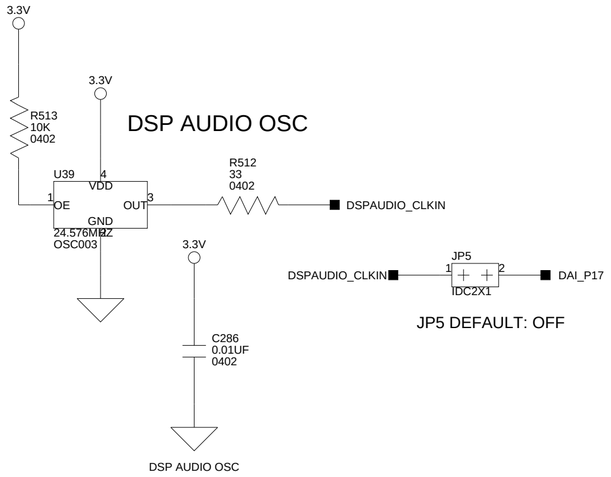

ANALOG DEVICES	20 Cotton Road Nashua, NH 03063 PH: 1-800-ANALOGD		
Title	ADSP-21489 EZ-BOARD DSP - POWER, CLKIN		
Size C	Board No. A0228-2009		Rev 0.1B
Date 3-18-2010_13:45		Sheet 5 of 16	

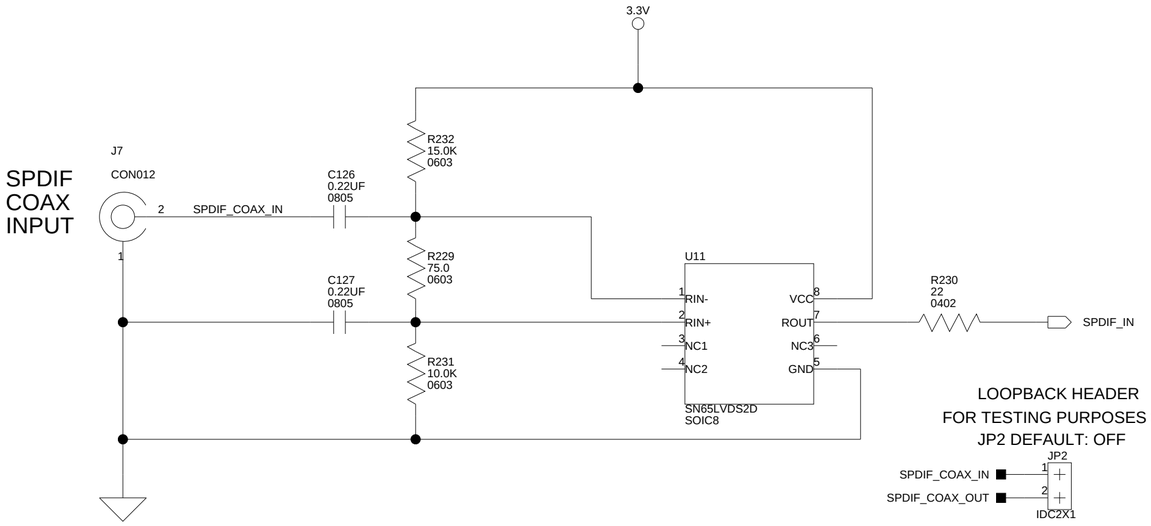

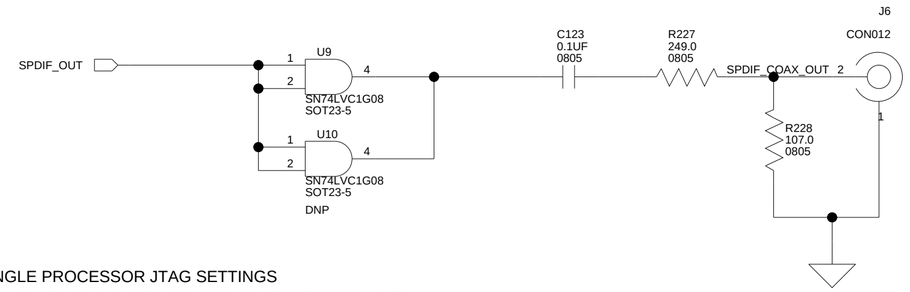

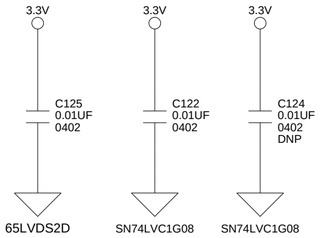

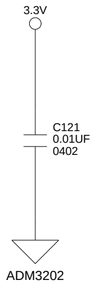

SERIAL PORT

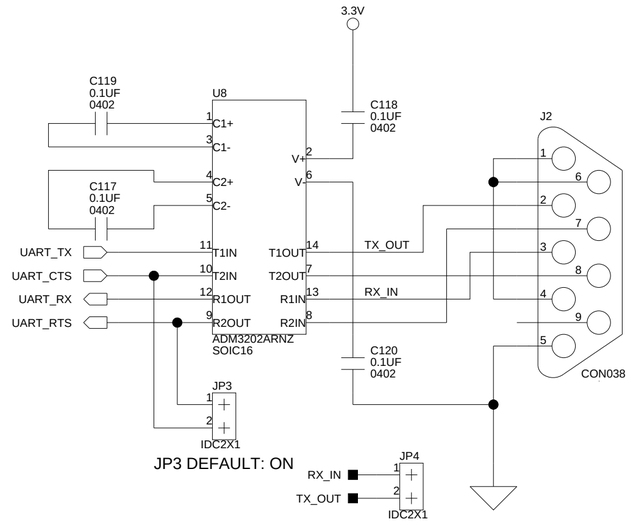

SINGLE PROCESSOR JTAG SETTINGS
VIA HP-USB EMUALTOR OR DEBUG AGENT (DEFAULT)

SWITCH	BOARD ATTACHED TO EMULATOR
SW19.1	ON
SW19.2	OFF
SW19.3	ON
SW19.4	OFF
SW19.5	ON
SW19.6	OFF
SW19.7	ON
SW19.8	OFF
SW20.1	ON
SW20.2	OFF
SW21.1	ON
SW21.2	OFF
SW22.1	OFF
SW22.2	OFF

MULTI PROCESSOR JTAG SETTINGS VIA HP-USB EMUALTOR
USING TWO OR MORE EZ-BOARDS (LINK PORT CABLES
REQUIRED FOR MORE THAN TWO BOARDS)

SWITCH	BOARD ATTACHED TO EMULATOR	BOARD(S) NOT ATTACHED TO EMULATOR
SW19.1	ON	OFF
SW19.2	ON	ON
SW19.3	ON	OFF
SW19.4	ON	ON
SW19.5	ON	OFF
SW19.6	ON	ON
SW19.7	ON	OFF
SW19.8	ON	ON
SW20.1	ON	OFF
SW20.2	OFF	OFF
SW21.1	OFF	OFF
SW21.2	ON	ON
SW22.1	OFF	ON
SW22.2	ON	OFF

JTAG SWITCHES

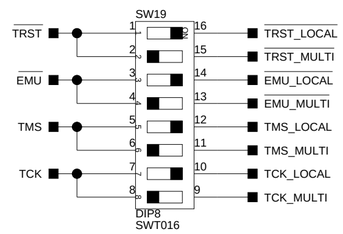

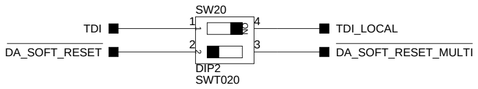

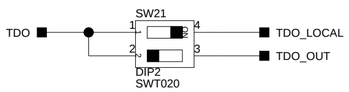

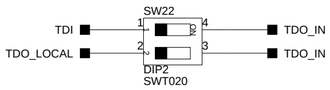

JTAG IN

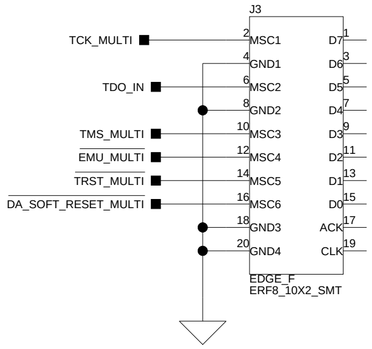

JTAG OUT

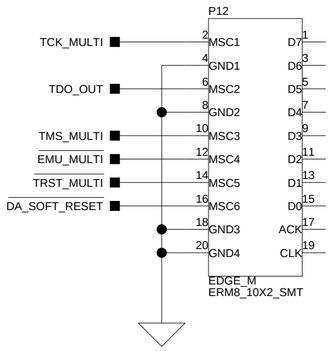

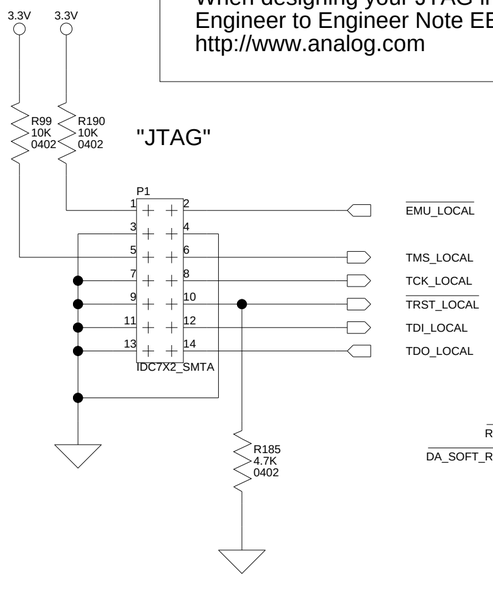

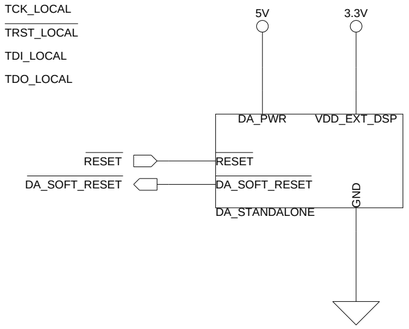

All debug agent interface circuitry is considered proprietary and hasbeen omitted from this schematic.

When designing your JTAG interface please refer to the Engineer to Engineer Note EE-68 which can be found at http://www.analog.com

ANALOG DEVICES
20 Cotton Road
Nashua, NH 03063
PH: 1-800-ANALOGD

Title	ADSP-21489 EZ-BOARD SPDIF, RS-232, JTAG INTERFACES		
Size C	Board No. A0228-2009		Rev 0.1B
Date 3-18-2010_13:45		Sheet 6 of 16	

COMPONENT	DSP PIN CONNECTED TO	CONNECTED VIA SWITCH
PB1	FLAG1/IRQ1	SW13.4
PB2	FLAG2/IRQ2/MS2	SW13.5
PB3	DAI_P19	SW7.3
PB4	DAI_P20	SW7.4
LED1	DPI_P6	SW3.6
LED2	DPI_P13	SW14.5
LED3	DPI_P14	SW14.6
LED4	DAI_P3	SW1.3
LED5	DAI_P4	SW1.4
LED6	DAI_P15	SW2.7
LED7	DAI_P16	SW2.8
LED8	DAI_P17	SW7.1

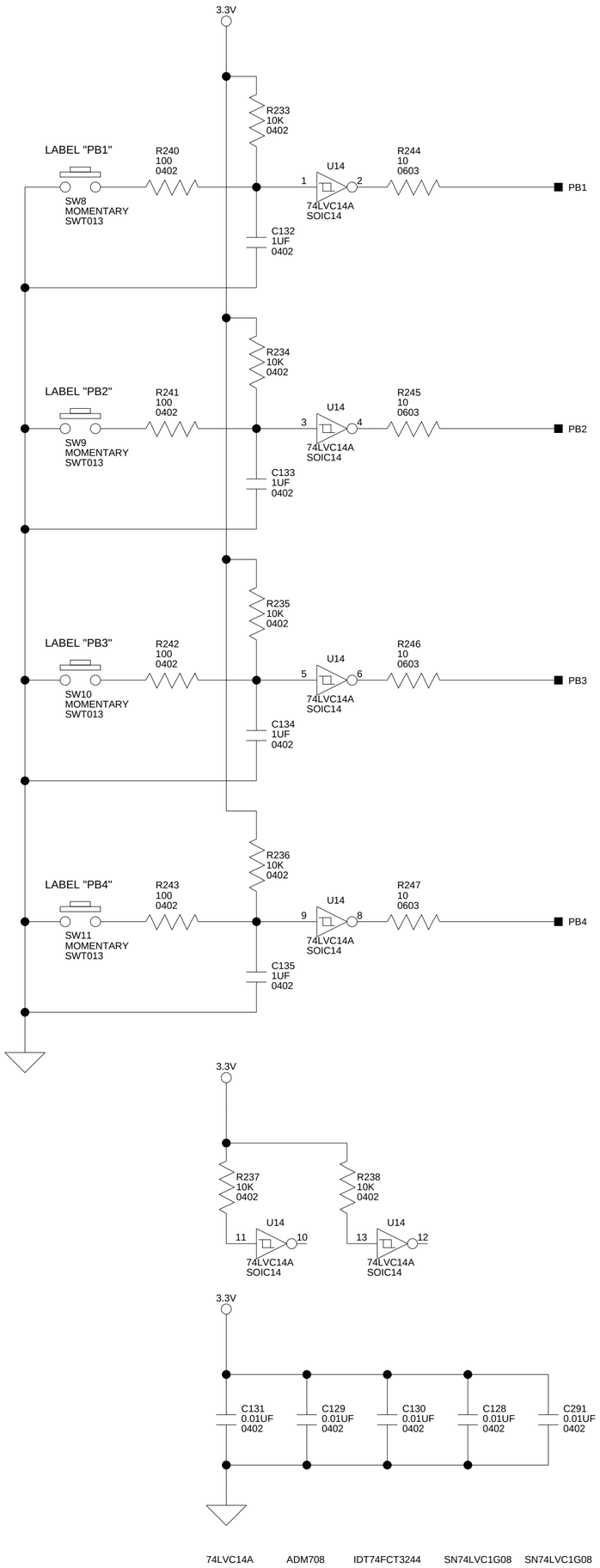

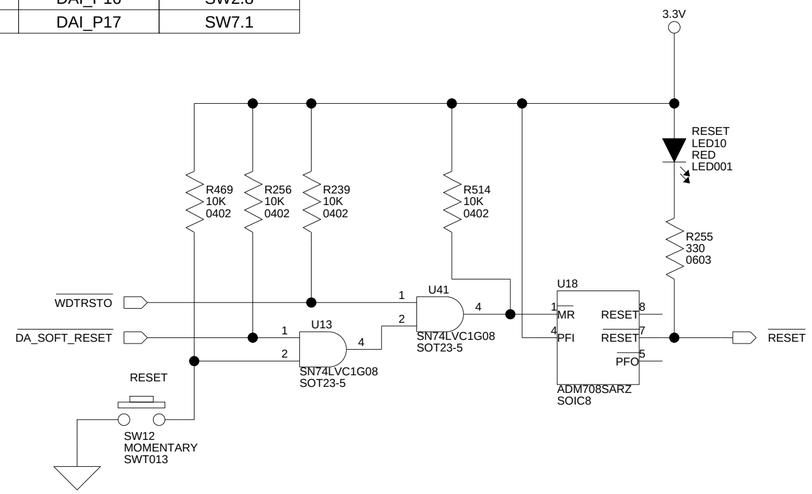

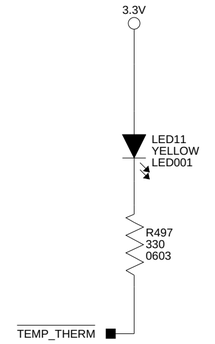

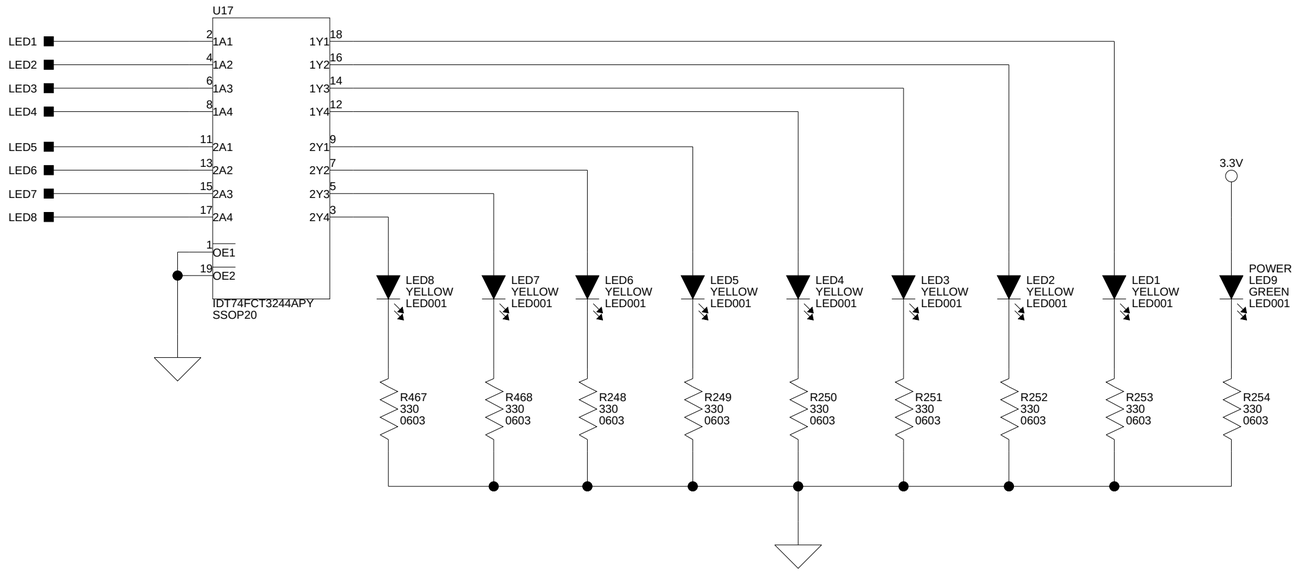

ANALOG DEVICES

20 Cotton Road
Nashua, NH 03063
PH: 1-800-ANALOGD

Title ADSP-21489 EZ-BOARD
RESET CIRCUIT, PUSHBUTTONS, LEDS

Size	Board No.	Rev
C	A0228-2009	0.1B

Date	Sheet
3-18-2010_13:45	7 of 16

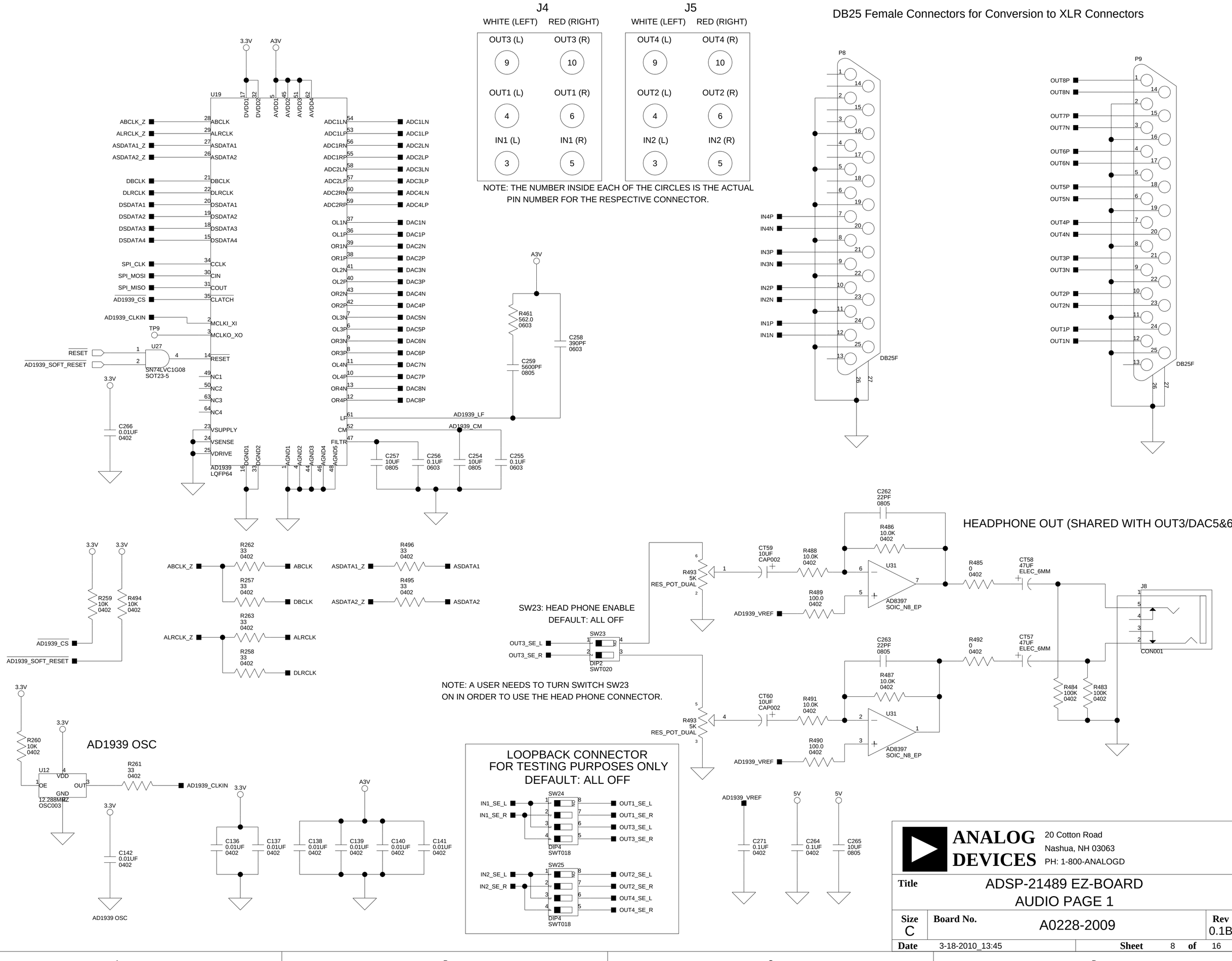

J4
WHITE (LEFT) RED (RIGHT)
OUT3 (L) OUT3 (R)
OUT1 (L) OUT1 (R)
IN1 (L) IN1 (R)
J5
WHITE (LEFT) RED (RIGHT)
OUT4 (L) OUT4 (R)
OUT2 (L) OUT2 (R)
IN2 (L) IN2 (R)
NOTE: THE NUMBER INSIDE EACH OF THE CIRCLES IS THE ACTUAL PIN NUMBER FOR THE RESPECTIVE CONNECTOR.
DB25 Female Connectors for Conversion to XLR Connectors
P8
P9
DB25F
U19
AD1939 LQFP64
U27
SN74LVC1G08 SOT23-5
HEADPHONE OUT (SHARED WITH OUT3/DAC5&6)
U31
AD8397 SOIC_N8_EP
J8
CON001
SW23: HEAD PHONE ENABLE
DEFAULT: ALL OFF
SW23
DIP2 SWT020
NOTE: A USER NEEDS TO TURN SWITCH SW23 ON IN ORDER TO USE THE HEAD PHONE CONNECTOR.
AD1939 OSC
U12
12.288MHZ OSC003
LOOPBACK CONNECTOR FOR TESTING PURPOSES ONLY
DEFAULT: ALL OFF
SW24
DIP4 SWT018
SW25
DIP4 SWT018
ANALOG DEVICES
20 Cotton Road
Nashua, NH 03063
PH: 1-800-ANALOGD
Title
ADSP-21489 EZ-BOARD
AUDIO PAGE 1
Size C
Board No. A0228-2009
Rev 0.1B
Date 3-18-2010_13:45
Sheet 8 of 16

IN1

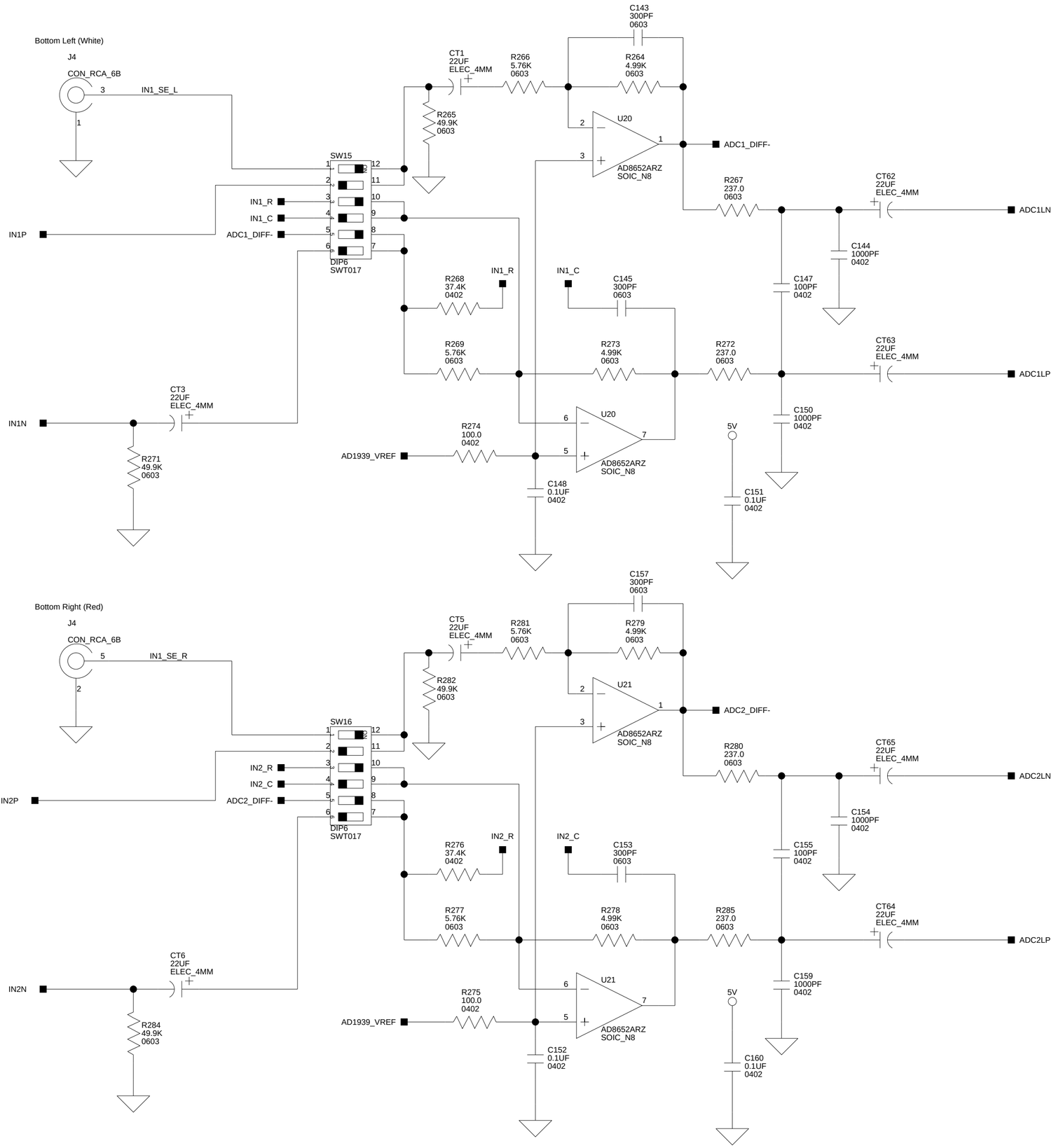

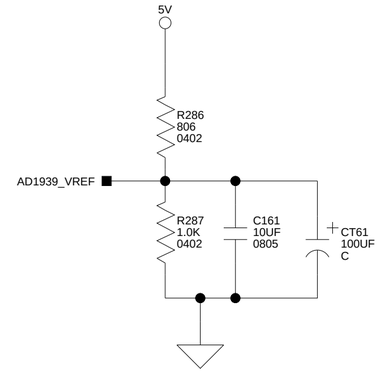

IN1 (LEFT) SETTINGS

SWITCH	SINGLE ENDED USE RCA IN (DEFAULT)	DIFFERENTIAL USE DB25 IN (P8)
SW15.1	ON	OFF
SW15.2	OFF	ON
SW15.3	ON	OFF
SW15.4	OFF	ON
SW15.5	ON	OFF
SW15.6	OFF	ON

NOTE: DIFFERENTIAL USE REQUIRES A DB25 TO XLR CABLE.

IN1 (RIGHT) SETTINGS

SWITCH	SINGLE ENDED USE RCA IN (DEFAULT)	DIFFERENTIAL USE DB25 IN (P8)
SW16.1	ON	OFF
SW16.2	OFF	ON
SW16.3	ON	OFF
SW16.4	OFF	ON
SW16.5	ON	OFF
SW16.6	OFF	ON

NOTE: DIFFERENTIAL USE REQUIRES A DB25 TO XLR CABLE.

ANALOG DEVICES
20 Cotton Road
Nashua, NH 03063
PH: 1-800-ANALOGD

Title	ADSP-21489 EZ-BOARD AUDIO PAGE 2	
Size: C	Board No.: A0228-2009	Rev: 0.1B
Date: 3-18-2010_13:45	Sheet 9 of 16	

IN2

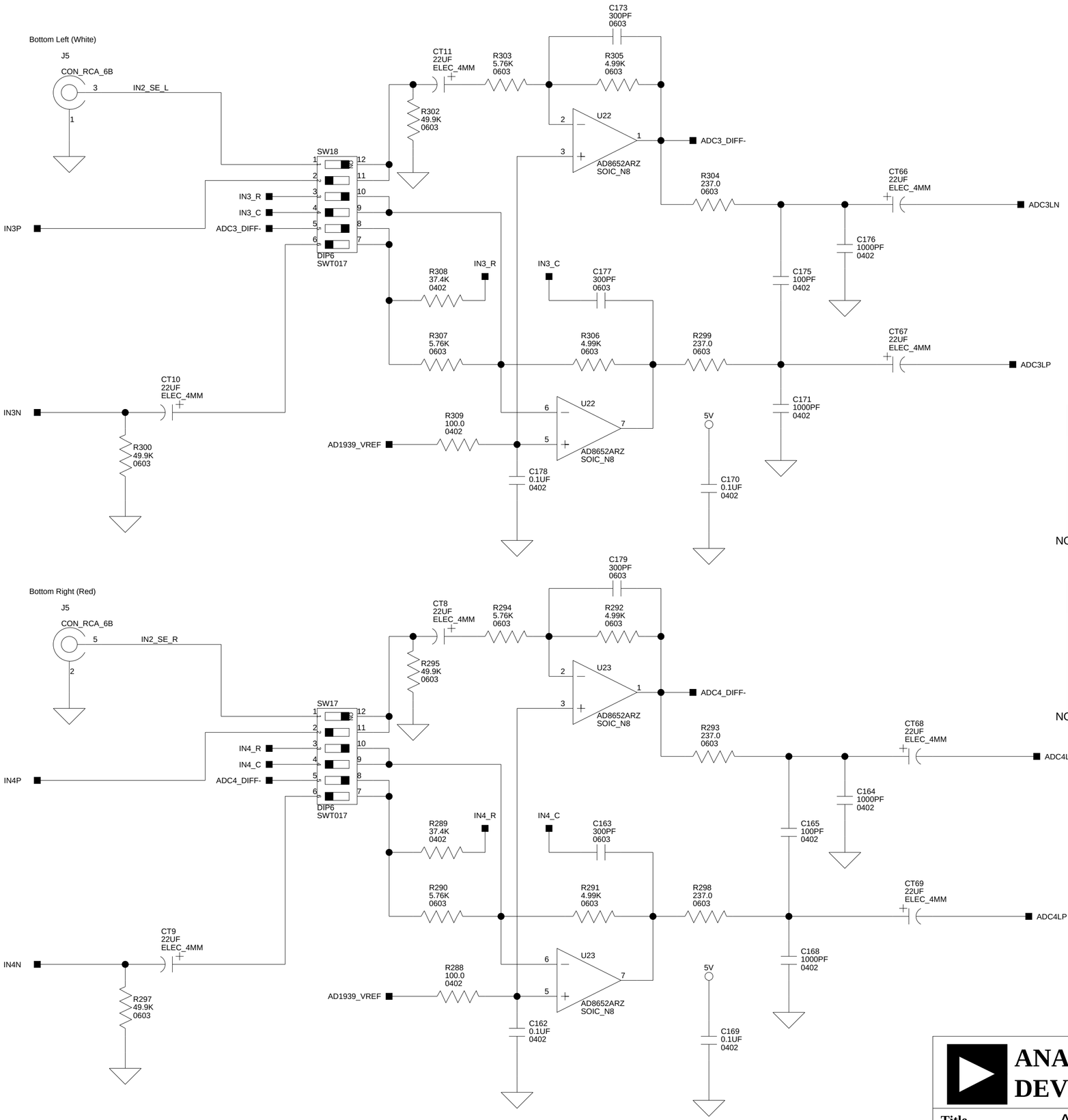

IN2 (LEFT) SETTINGS

SWITCH	SINGLE ENDED USE RCA IN (DEFAULT)	DIFFERENTIAL USE DB25 IN (P8)
SW18.1	ON	OFF
SW18.2	OFF	ON
SW18.3	ON	OFF
SW18.4	OFF	ON
SW18.5	ON	OFF
SW18.6	OFF	ON

NOTE: DIFFERENTIAL USE REQUIRES A DB25 TO XLR CABLE.

IN2 (RIGHT) SETTINGS

SWITCH	SINGLE ENDED USE RCA IN (DEFAULT)	DIFFERENTIAL USE DB25 IN (P8)
SW17.1	ON	OFF
SW17.2	OFF	ON
SW17.3	ON	OFF
SW17.4	OFF	ON
SW17.5	ON	OFF
SW17.6	OFF	ON

NOTE: DIFFERENTIAL USE REQUIRES A DB25 TO XLR CABLE.

ANALOG DEVICES
20 Cotton Road
Nashua, NH 03063
PH: 1-800-ANALOGD

Title	ADSP-21489 EZ-BOARD AUDIO PAGE 3	
Size C	**Board No.** A0228-2009	**Rev** 0.1B
Date 3-18-2010_13:45	**Sheet** 10 **of** 16	

OUT1

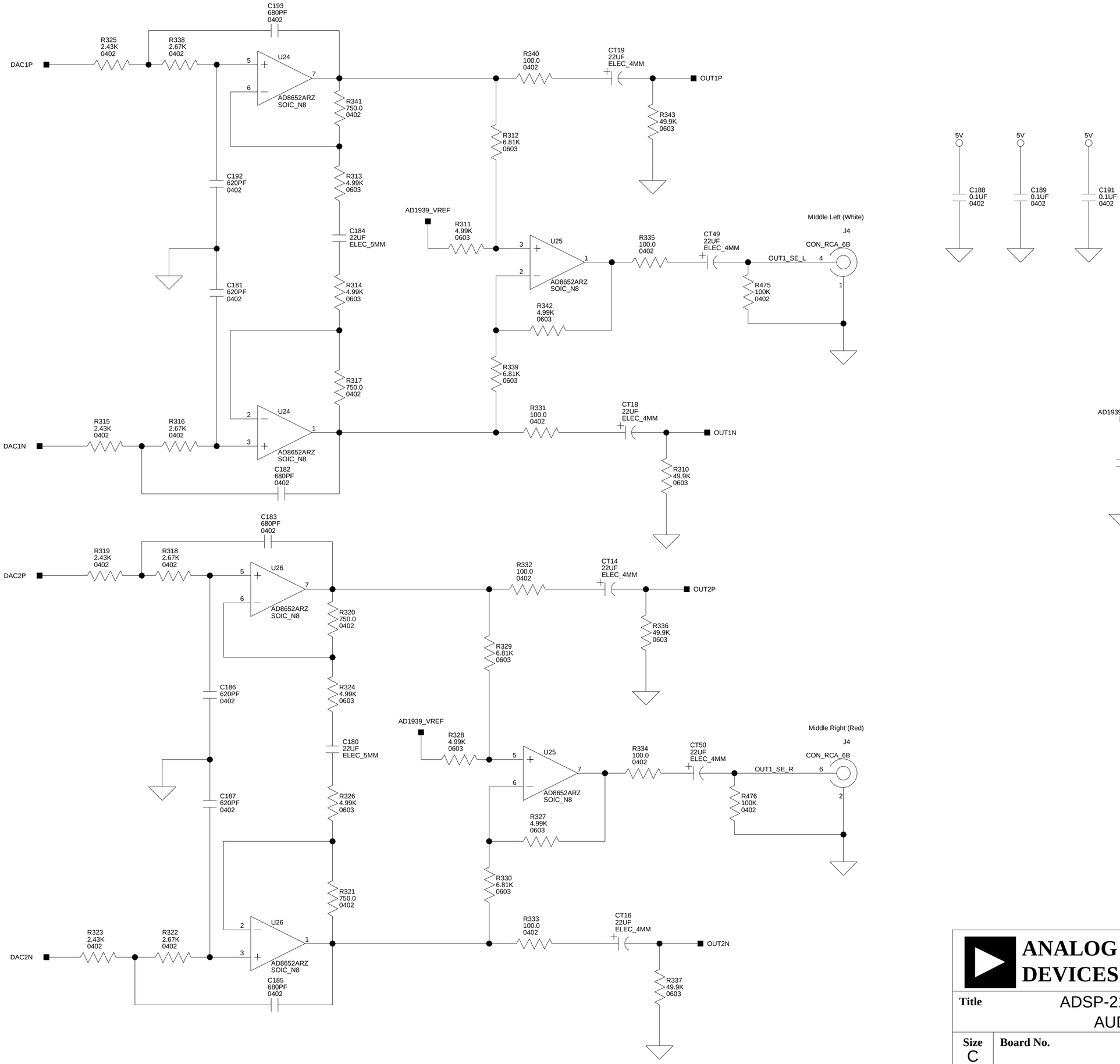

ANALOG DEVICES	20 Cotton Road Nashua, NH 03063 PH: 1-800-ANALOGD
Title	ADSP-21489 EZ-BOARD AUDIO PAGE 4
Size C	**Board No.** A0228-2009 **Rev** 0.1B
Date 3-18-2010_13:45	**Sheet** 11 **of** 16

OUT2

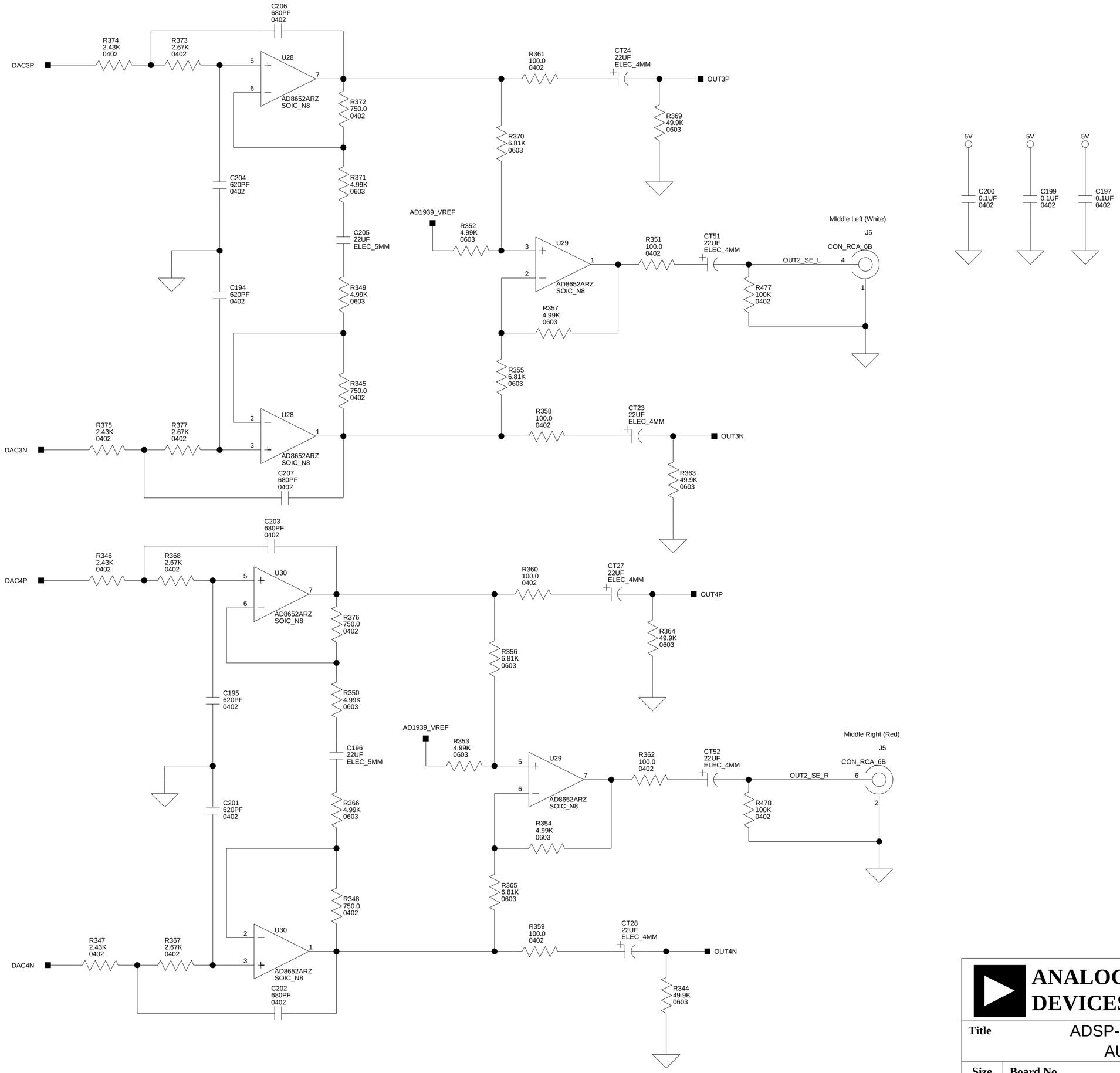

ANALOG DEVICES	20 Cotton Road Nashua, NH 03063 PH: 1-800-ANALOGD	
Title	ADSP-21489 EZ-BOARD AUDIO PAGE 5	
Size C	**Board No.** A0228-2009	**Rev** 0.1B
Date 3-18-2010_13:45	**Sheet** 12 **of** 16	

OUT3

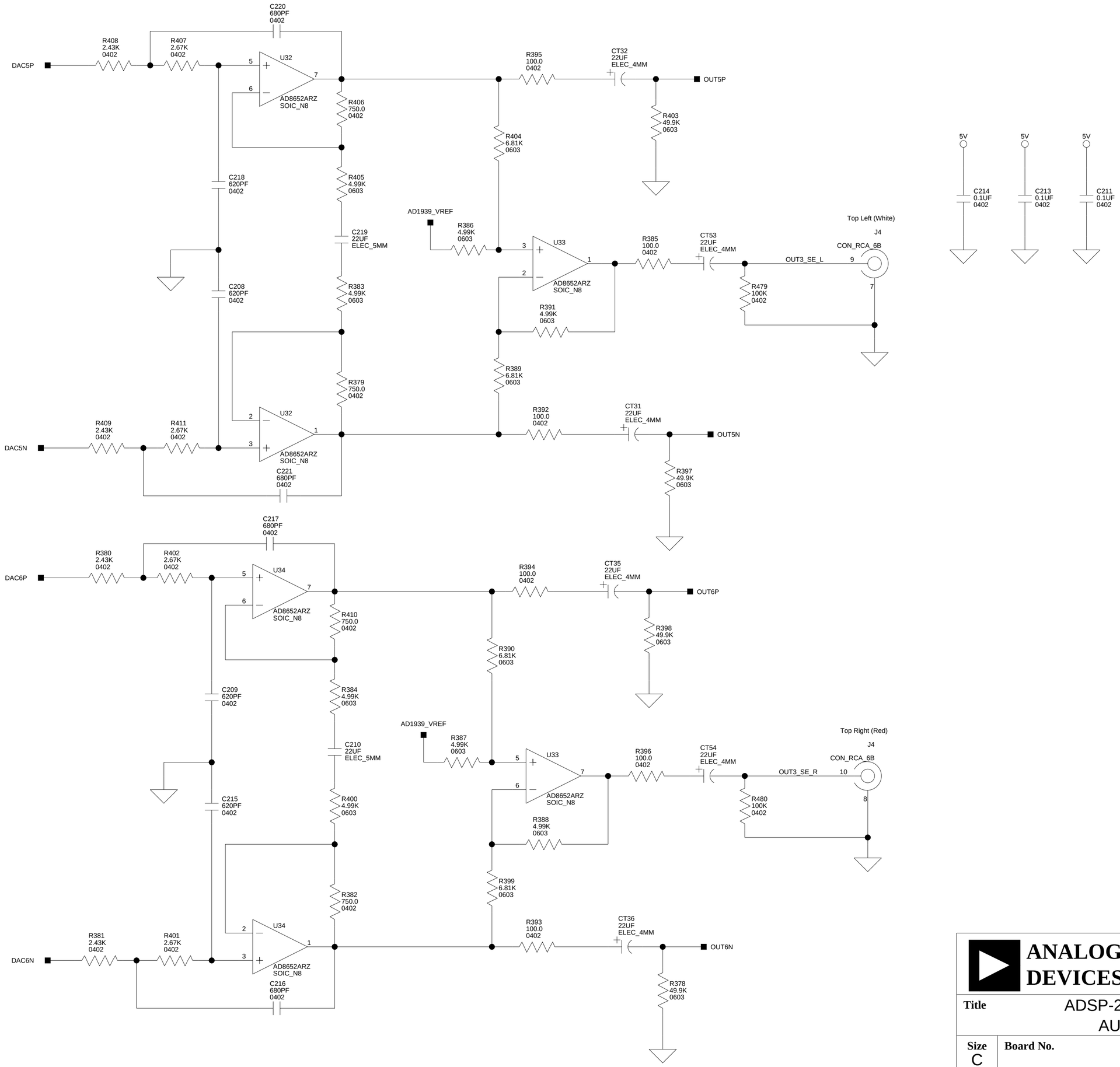

ANALOG DEVICES	20 Cotton Road Nashua, NH 03063 PH: 1-800-ANALOGD	
Title	ADSP-21489 EZ-BOARD AUDIO PAGE 6	
Size C	**Board No.** A0228-2009	**Rev** 0.1B
Date 3-18-2010_13:45	**Sheet** 13 **of** 16	

OUT4

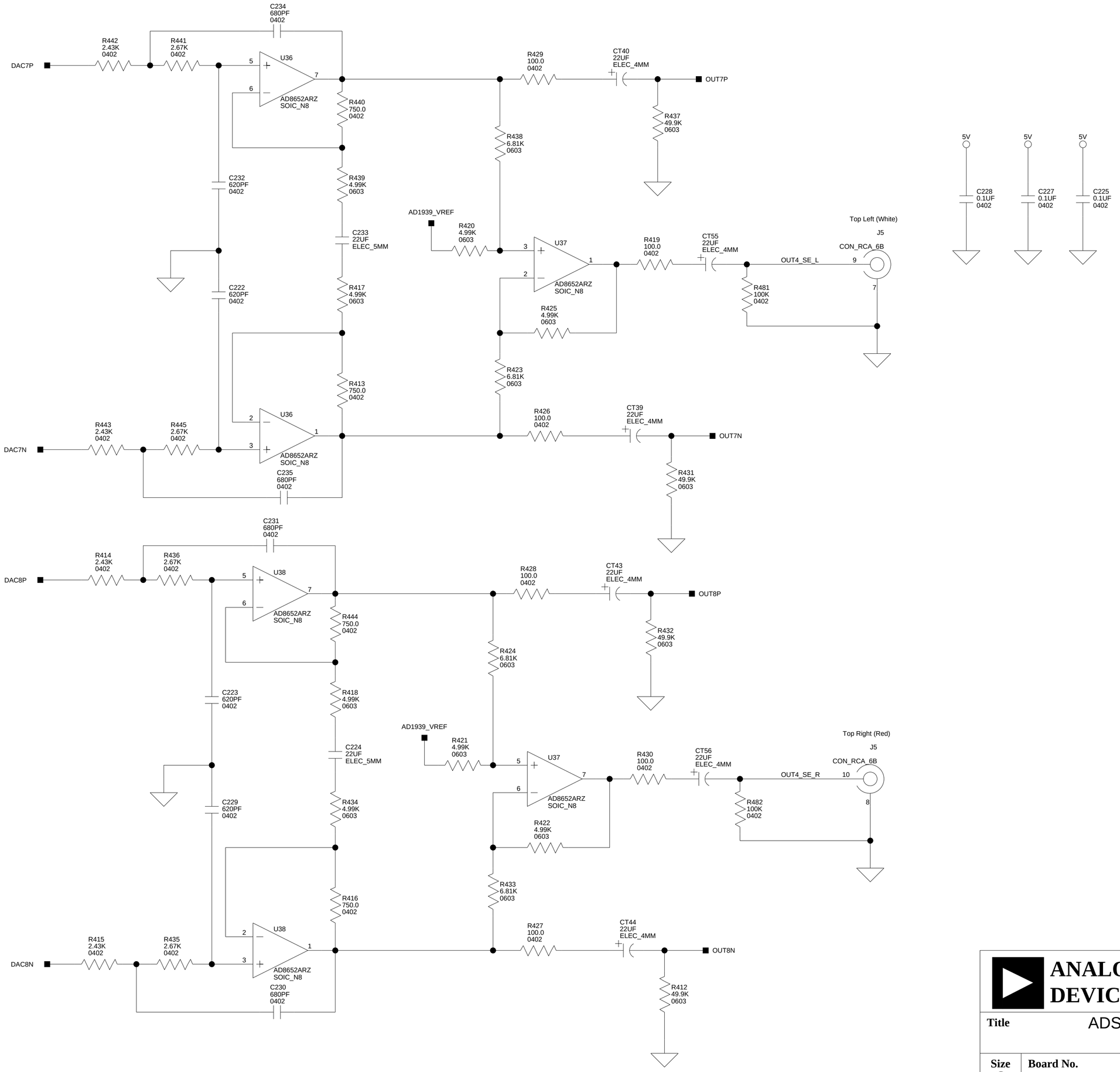

ANALOG DEVICES	20 Cotton Road Nashua, NH 03063 PH: 1-800-ANALOGD	
Title	ADSP-21489 EZ-BOARD AUDIO PAGE 7	
Size C	**Board No.** A0228-2009	**Rev** 0.1B
Date 3-18-2010_13:45	**Sheet** 14 **of** 16	

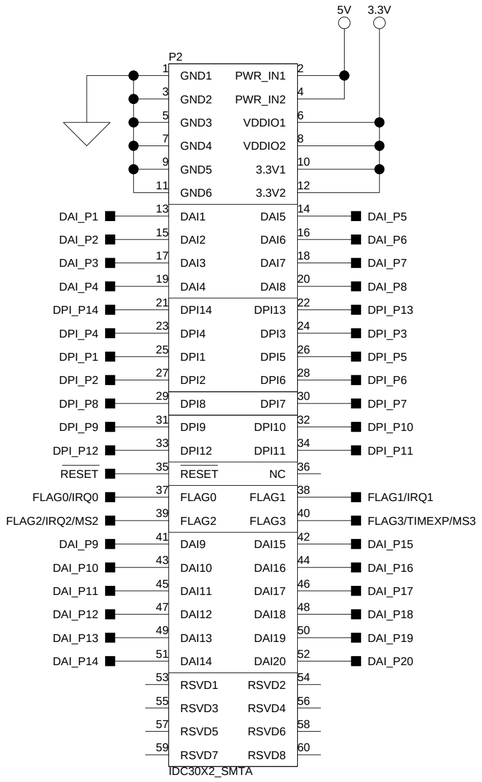

DSP PIN NAME	PERIPHERAL NET CONNECTED TO	CONNECTED VIA SWITCH	SWITCH DEFAULT
DAI_P1	SPDIF_OUT	SW1.1	ON
DAI_P2	AD1939_SOFT_RESET	SW1.2	ON
DAI_P3	LED4	SW1.3	ON
DAI_P4	LED5	SW1.4	ON
DAI_P5	ASDATA1	SW1.5	ON
DAI_P6	ASDATA2	SW1.6	ON
DAI_P7	ABCLK	SW1.7	ON
DAI_P8	ALRCLK	SW1.8	ON
DAI_P9	DSDATA4	SW2.1	ON
DAI_P10	DSDATA3	SW2.2	ON
DAI_P11	DSDATA2	SW2.3	ON
DAI_P12	DSDATA1	SW2.4	ON
DAI_P13	DBCLK	SW2.5	OFF
DAI_P14	DLRCLK	SW2.6	OFF
DAI_P15	LED6	SW2.7	ON
DAI_P16	LED7	SW2.8	ON
DAI_P17	LED8	SW7.1	ON
DAI_P18	SPDIF_IN	SW7.2	ON
DAI_P19	PB3	SW7.3	ON
DAI_P20	PB4	SW7.4	ON

NOTE: SHUTTING OFF ANY OF THE SWITCHES FOR EXPANSION USE WILL CAUSE LOSS OF FUNCTIONALITY TO THE RESPECTIVE PERIPHERAL ON THE EZ-BOARD.

DSP PIN NAME	PERIPHERAL NET CONNECTED TO	CONNECTED VIA SWITCH	SWITCH DEFAULT
DPI_P1	SPI_MOSI	SW3.1	ON
DPI_P2	SPI_MISO	SW3.2	ON
DPI_P3	SPI_CLK	SW3.3	ON
DPI_P4	AD1939_CS	SW3.4	ON
DPI_P5	SPI_CS	SW3.5	ON
DPI_P6	LED1	SW3.6	ON
DPI_P7	TEMP_SDA	SW3.7	ON
DPI_P8	TEMP_SCK	SW3.8	ON
DPI_P9	UART_TX	SW14.1	ON
DPI_P10	UART_RX	SW14.2	ON
DPI_P11	UART_RTS	SW14.3	OFF
DPI_P12	UART_CTS	SW14.4	OFF
DPI_P13	LED2	SW14.5	ON
DPI_P14	LED3	SW14.6	ON

NOTE: SHUTTING OFF ANY OF THE SWITCHES FOR EXPANSION USE WILL CAUSE LOSS OF FUNCTIONALITY TO THE RESPECTIVE PERIPHERAL ON THE EZ-BOARD.

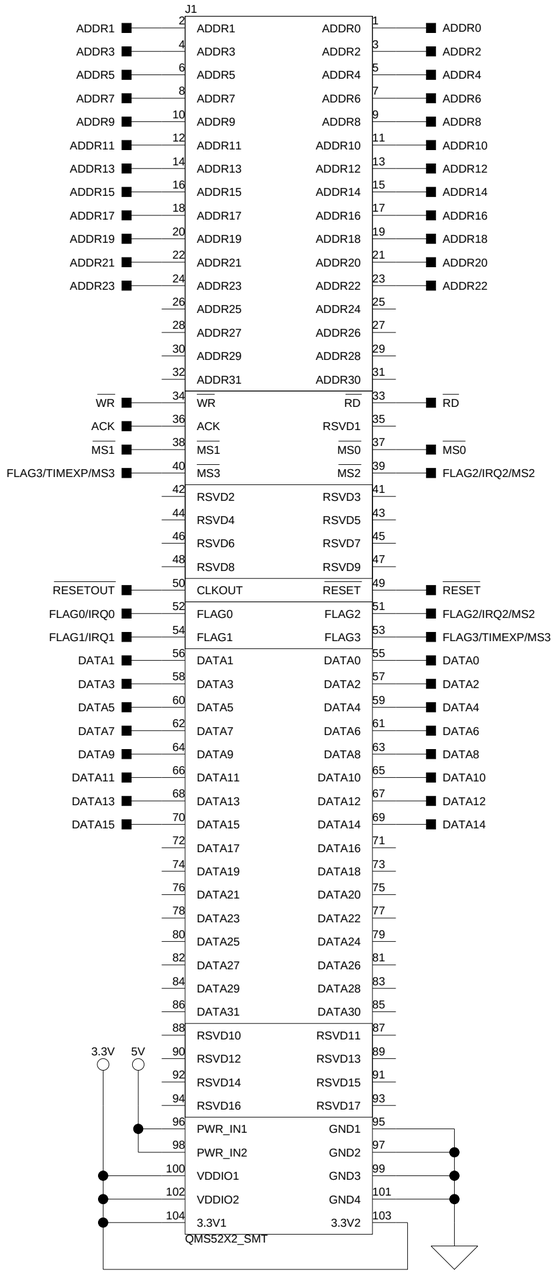

DSP PIN NAME	PERIPHERAL NET CONNECTED TO	CONNECTED VIA SWITCH	SWITCH DEFAULT
MS0	SDRAM_CS	SW13.1	OFF
MS1	FLASH_CS	SW13.2	ON
FLAG0/IRQ0	TEMP_THERM	SW13.3	OFF
FLAG1/IRQ1	PB1	SW13.4	ON
FLAG2/IRQ2/MS2	PB2	SW13.5	ON
FLAG3/TIMEXP/MS3	TEMP_IRQ	SW13.6	OFF

NOTE: SHUTTING OFF ANY OF THE SWITCHES FOR EXPANSION USE WILL CAUSE LOSS OF FUNCTIONALITY TO THE RESPECTIVE PERIPHERAL ON THE EZ-BOARD.

END OF LINE RC NETWORKS ARE DO NOT POPULATED BY DEFAULT.

THESE ARE HERE IN CASE THEY ARE NEEDED IN THE FUTURE.

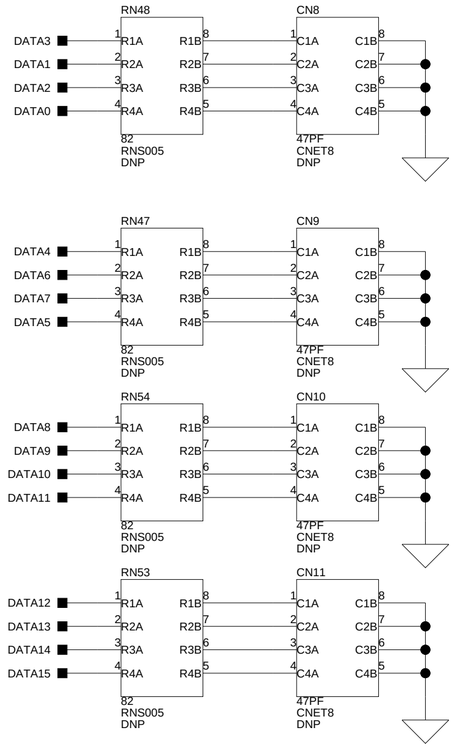

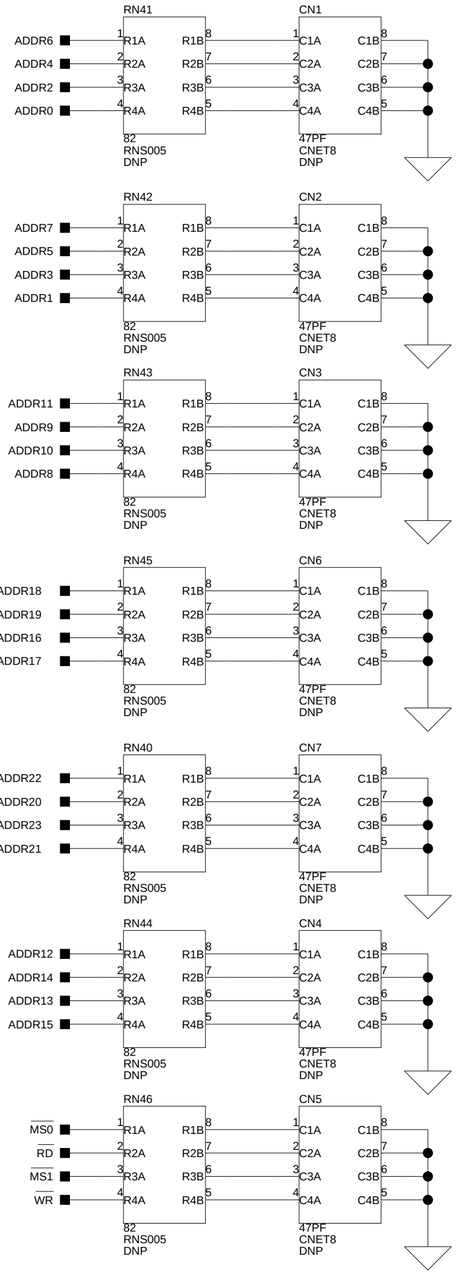

ANALOG DEVICES
20 Cotton Road
Nashua, NH 03063
PH: 1-800-ANALOGD

Title	ADSP-21489 EZ-BOARD EXPANSION II INTERFACE		
Size C	Board No. A0228-2009		Rev 0.1B
Date 3-18-2010_13:45		Sheet 15 of 16	

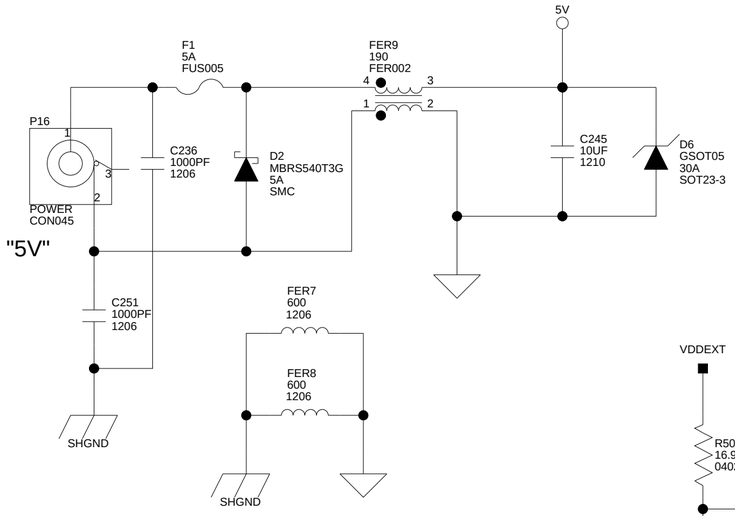

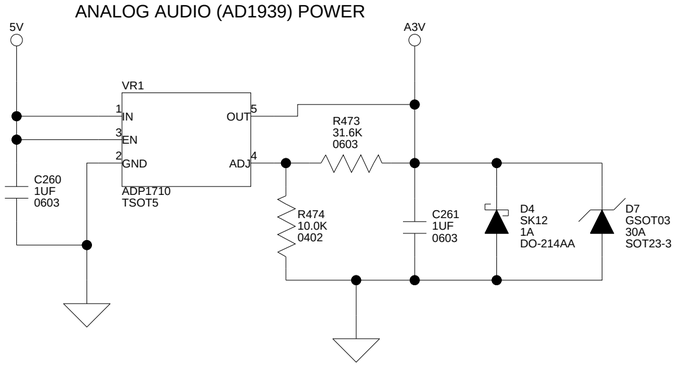

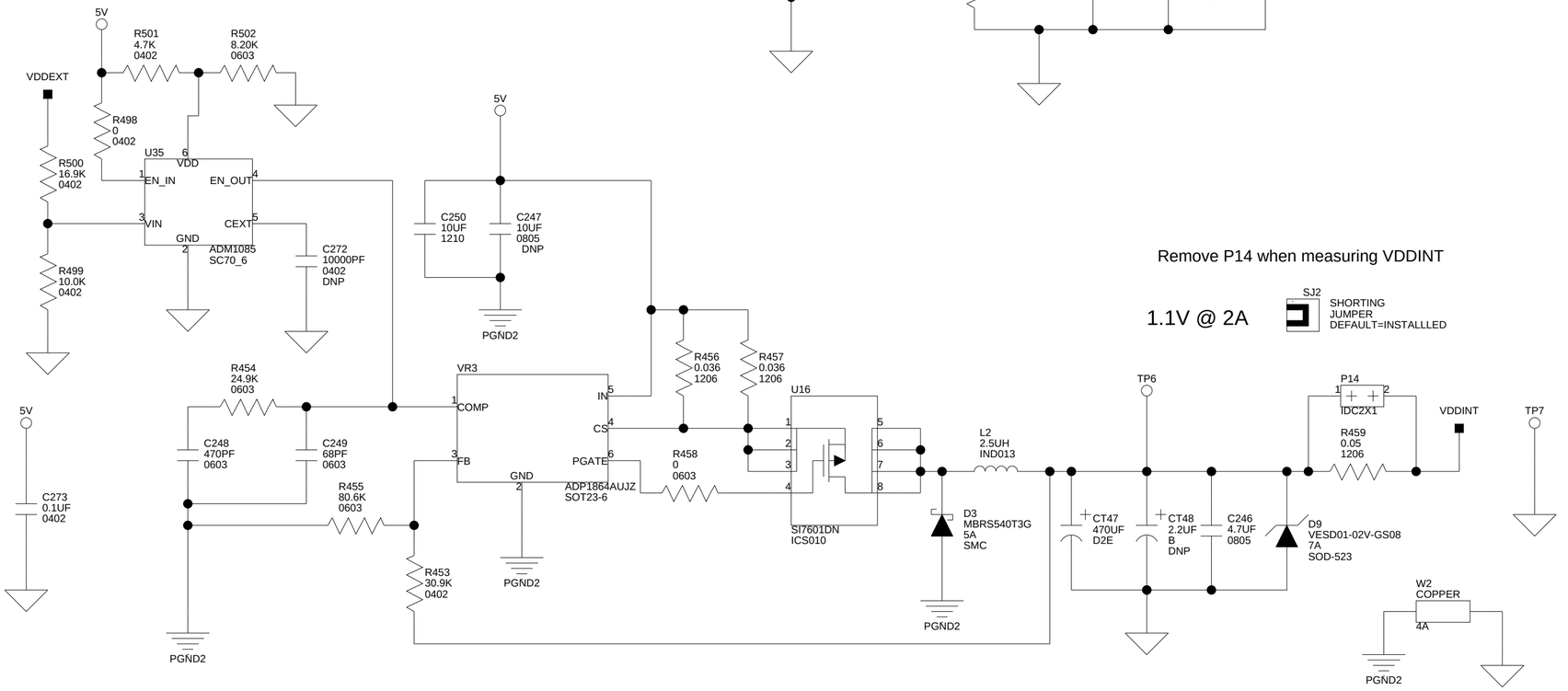

GND Test Points are scattered on PCB for Test Measurement Purposes.

LABEL "GND" ON ALL TPs

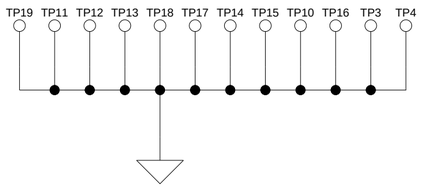

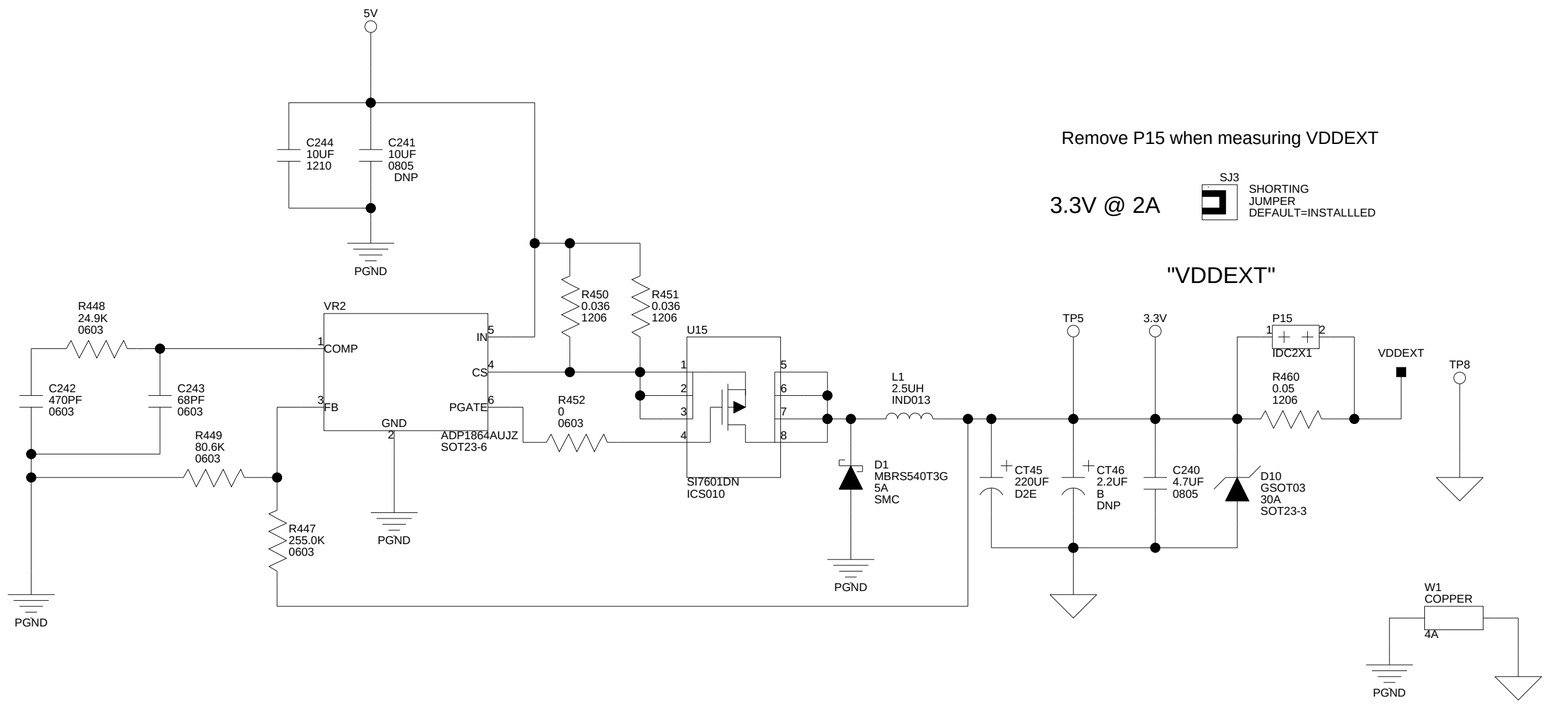

ANALOG DEVICES	20 Cotton Road Nashua, NH 03063 PH: 1-800-ANALOGD		
Title	ADSP-21489 EZ-BOARD POWER		
Size C	**Board No.** A0228-2009		**Rev** 0.1B
Date 3-18-2010_13:45		**Sheet** 16 **of** 16	

I INDEX

A

ABCLK signal, 1-16, 2-3, 2-8
AD1939 codec, 1-15
  DAI connections, 2-3, 2-8, 2-9, 2-14
  DPI connections, 2-5, 2-9
AD1939_CS signal, 2-9
AD1939_SOFT_RESET signal, 2-8
ALRCLK signal, 1-16, 2-8
analog audio interface, *See* audio
analog-to-digital converters (ADCs), *See* AD1939 codec
architecture, of this EZ-Board, 2-2
ASDATA1-2 signals, 2-3, 2-8
audio
  codec, *See also* AD1939 codec
  interface, 1-15
  left select switch (SW15), 2-14
  left select switch (SW18), 2-16
  loopback switches (SW24-25), 2-18
  RCA connectors (J4-5), 1-15, 2-26
  right select switches (SW16-17), 2-14, 2-15

B

background telemetry channel (BTC), 1-22
bill of materials, A-1
board schematic (ADSP-21489), B-1
boot
  modes, 2-10
  mode select switch (SW4), 1-11, 1-12, 2-10

C

configuration, of this EZ-Board, 1-3
connectors
  diagram of locations, 2-24
  J1 (expansion interface II), 1-20, 2-25
  J2 (RS-232), 2-25
  J3 (MP JTAG), 1-20, 2-17, 2-25
  J4-5 (RCA), 1-15, 2-26
  J6 (S/PDIF in), 1-14, 2-26
  J7 (S/PDIF out), 1-14, 2-26
  J8 (headphones), 1-16, 2-27
  P12 (MP JTAG out), 1-20, 2-17, 2-28
  P14 (VDDINT power), 1-21, 2-28
  P15 (VDDEXT power), 1-21, 2-29
  P16 (5.0V wall adaptor), 1-3, 1-5, 1-19, 2-29
  P1 (JTAG), 1-5, 1-19, 2-27
  P2 (expansion interface II), 1-20, 2-27
  P8-9 (diff in/out), 2-28
  ZP1 (debug agent), 2-29
contents, of this EZ-Board package, 1-2
core voltage, 2-2
customer support, xiii

D

DAI_P1-2 pins, 2-3
DAI_P15-17 pins, 2-3, 2-22
DAI_P19-20 pins, 1-19, 2-3
DAI_P3-4 pins, 2-3, 2-22
DAI_P5-14 pins, 2-3
DB25 connector, 2-14, 2-15, 2-16
DBCLK signal, 1-16, 2-4, 2-9

debug agent connector (ZP1), 2-29
default configuration, of this EZ-Board, 1-3
differential on/out connectors (P8-9), 2-28
digital audio interface (DAI)
  connections, 2-3
  data transfer from codec, 1-15
  SW1 switch, 1-14, 2-8
  SW2 switch, 2-8
  SW7 switch, 1-14, 1-19, 2-11, 2-12
digital peripheral interface (DPI)
  connections, 2-5
  data transfer from codec, 1-15
  SPI memory connections, 1-12
  SW14 switch, 1-17, 2-5, 2-13
  SW3 switch, 1-12, 1-13, 2-9
digital-to-analog converters (DACs), *See* AD1939 codec
DLRCLK signal, 1-16, 2-4, 2-9
DPI_13-14 pins, 2-22
DPI_P6 pin, 2-22
DSDATA1-4 signals, 2-3, 2-8
DSP clock config switch (SW5), 2-10

E

example programs, 1-22
expansion interface II
  J1 connector, 1-20, 2-25
  P2 connector, 1-20, 2-27
external memory space, 1-8, 1-9
external port enable switch (SW13), 1-11, 1-13, 1-14, 1-18, 2-6, 2-12

F

features, of this EZ-Board, viii
FLAG0 pin, 2-6, 2-13
FLAG1 pin, 1-18, 2-6, 2-13
FLAG2 pin, 1-18, 2-6, 2-13
FLAG3 pin, 2-6, 2-13
FLAG4 pin, 2-13
FLASH_CS signal, 2-13
flash WP jumper (JP1), 2-20

G

general-purpose IO pins (GPIO), 1-17, 2-12

H

headphones
  enable switch (SW23), 1-16, 2-18
  out connector (J8), 2-27

I

installation, of this EZ-Board, 1-4, 1-5
Integrated Interchip Sound (I2C) mode, 1-15
internal memory space, 1-9
IO voltage, 2-2
IRQ0-2 pins, 1-18, 2-6, 2-13

J

J3 (MP JTAG) connector, 1-20, 2-17, 2-25
J8 (headphones) connector, 1-16
JTAG, 2-16
  interface, 1-19
  cables, 2-17, 2-25, 2-28
  P1 connector, 1-5, 1-19, 2-27
  SW19-22 switches, 1-20, 2-16
jumpers
  diagram of locations, 2-19
  JP1 (flash WP), 2-20
  JP2 (S/PDIF loopback), 2-20
  JP3 (UART RTS/CTS), 2-20
  JP4 (UART loopback), 2-20
  JP5 (processor audio oscillator), 2-20

L

LEDs
- diagram of locations, 2-21
- connections, 1-18, 2-22
- LED10 (reset), 2-22
- LED11 (thermal limit), 1-14, 2-23
- LED1 (DPI_P6, SW3), 2-5, 2-9
- LED2 (DPI_P13, SW14), 2-5, 2-14
- LED3 (DPI_14, SW14), 2-5, 2-14
- LED4 (DAI_P3, SW1), 1-5, 2-3, 2-8
- LED5 (DAI_P4, SW1), 2-3, 2-8
- LED6 (DAIP15, SW2), 2-4, 2-9
- LED7 (DAI_16, SW2), 2-4, 2-9
- LED8 (DAI_P17, SW7), 2-4, 2-11
- LED9 (power), 2-22

license restrictions, viii, 1-8

M

master input clock (MCLK), 1-15
memory map, of this EZ-Board, 1-8
MS0 select line, 2-6, 2-13
MS1 select line, 1-11, 2-6, 2-13
MS2-3 select lines, 1-18, 2-6, 2-13
multi-processor configuration, 2-16, 2-18

N

notation conventions, xviii

O

oscilloscope, 1-21

P

P12 (MP JTAG out) connector, 1-20, 2-17, 2-28
package contents, 1-2
parallel flash memory, viii, 1-11, 2-12
PB1-2 push buttons, 2-6, 2-13
PB3-4 push buttons, 2-11
POST (power-on-self test) program, 1-11, 1-22
power
- 5V wall adaptor (P16), 1-3, 1-5, 1-19, 2-29
- LED (LED9), 2-22
- measurements, 1-21

processor audio oscillator jumper (JP5), 2-20
product overview, viii
push buttons
- connections, 1-18, 2-6, 2-11, 2-13
- SW8-11 (IO) switches, 1-18, 1-19, 2-12

R

RCA audio connectors (J4-5), 1-15, 2-26
reference design info, 1-23
reset
- LED (LED10), 2-22
- push button (SW12), 2-12

restrictions, of evaluation license, 1-8
RS-232 connector (J2), 2-25

S

schematic, of ADSP-21489 EZ-Board, B-1
SDRAM_CS signal, 2-6
SDRAM interface, viii, 1-9, 1-10, 2-6
serial clock signal (SCK), 1-13
serial data signal (SDA), 1-13
serial peripheral interconnect (SPI) ports, *See* SPI interface
session startup procedure, 1-6
signal routing units
- SRU2 (DPI interface), 2-4
- SRU (DAI interface), 2-3

single-processor configuration, 2-16, 2-17
SPDIF_IN signal, 1-14, 2-11

S/PDIF interface
  connections, 1-14, 2-3
  in connector (J6), 1-14, 2-26
  loopback jumper (JP2), 2-20
  out connector (J7), 1-14, 2-26
SPDIF_OUT signal, 1-14, 2-8
SPI_CLK signal, 2-5, 2-9
SPI_CS signal, 2-5, 2-9
SPI interface, 1-12
SPI_MISO signal, 2-5, 2-9
SPI_MOSI signal, 2-5, 2-9
SRAM interface, 1-8, 1-10
standalone debug agent, vii, 1-5, 1-8, 1-19
SW12 (reset) push button, 2-12
SW13 (external port enable), 1-11, 1-13, 1-14, 1-18, 2-6, 2-12
SW14 (DPI 9-14 enable) switch, 1-17, 2-5, 2-13
SW15 (audio left select) switch, 2-14
SW16-17 (audio right select) switches, 2-14, 2-15
SW18 (audio left select) switch, 2-16
SW19-22 (JTAG) switches, 1-20, 2-16
SW1 (DAI 1-8 enable) switch, 1-14, 2-3, 2-8
SW23 (headphone enable) switch, 1-16, 2-18
SW24-25 (audio loopback) switches, 2-18
SW2 (DAI 9-16 enable) switch, 2-8
SW3 (DPI 1-8 enable) switch, 1-12, 1-13, 2-5, 2-9
SW4 (boot mode select) switch, 1-11, 1-12, 2-10
SW5 (DSP clock config), 2-10
SW7 (DAI 17-20 enable) switch, 1-14, 1-19, 2-11, 2-12
SW8-11 (IO) push buttons, 1-18, 1-19, 2-12
switches, diagram of locations, 2-7
system architecture, of this EZ-Board, 2-2

T

TEMP_SCK signal, 2-5, 2-9
TEMP_SDA signal, 2-5, 2-9
temp sensor interface, ix, 1-13, 2-6, 2-9, 2-23
THD_M signal, 1-13
THD_P signal, 1-13
thermal limit LED (LED11), 2-23
time-division multiplexed (TDM) mode, 1-15
TIMEXP pin, 2-13

U

UART
  interface connections, 1-17
  loopback jumper (JP4), 2-20
  RTS/CTS jumper (JP3), 2-20
UART_CTS signal, 1-17, 2-5, 2-13, 2-20
UART_RTS signal, 1-17, 2-5, 2-13, 2-20
UART_RX signal, 1-17, 2-5, 2-13
UART_TX signal, 1-17, 2-5, 2-13
universal asynchronous receiver transmitter, *See* UART
USB monitor LED (LED4), 1-5

V

VDDEXT
  power connector (P15), 2-29
  voltage domain, 1-21
VDDINT
  power connector (P14), 2-28
  voltage domain, 1-21
voltage planes, 1-21, 2-28, 2-29

W

watch dog timer (WDT) interface, 1-12