REV.	ZONE	LTR	DESCRIPTION	DATE	REVISER	APPD

RoHS Compliant

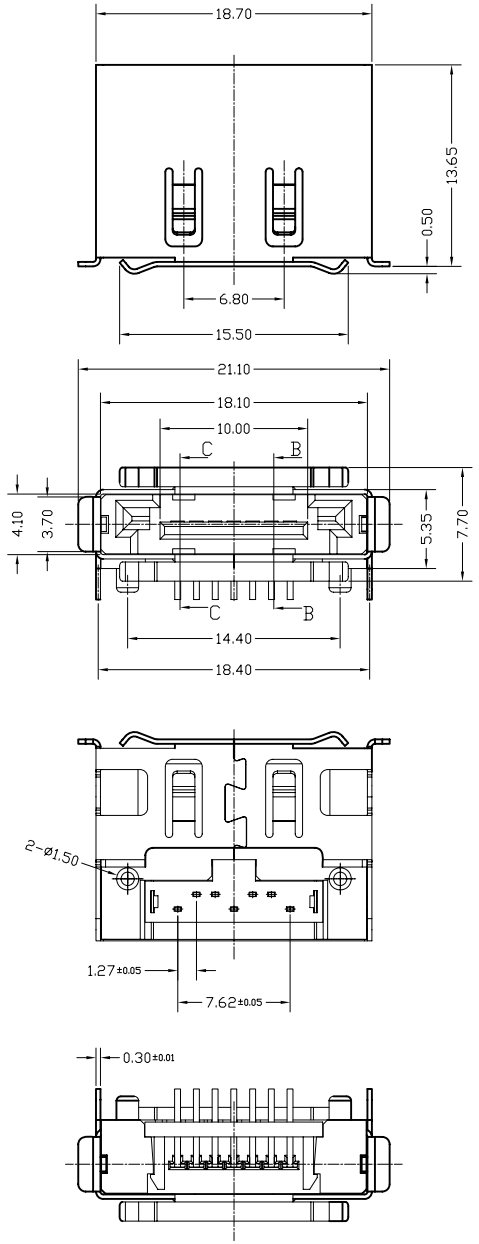

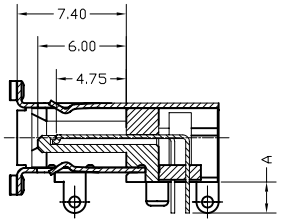

SECTION C-C

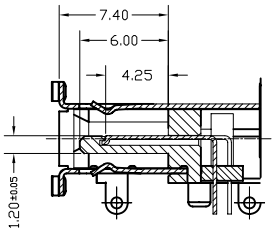

SECTION B-B

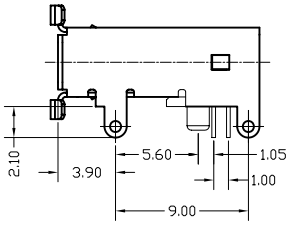

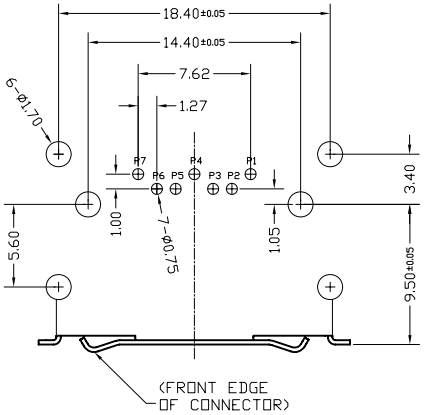

RECOMMENDED PC BOARD LAYOUT

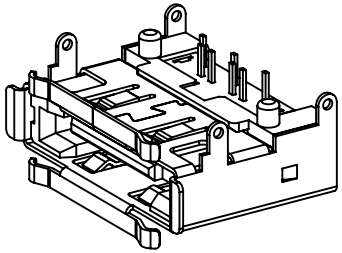

ORDERING INFORMATION:

6SA L 07 MP - 3 * * B
(1) (2) (3) (4) (5) (6) (7) (8)

(1) SERIES NUMBER:
6SA :EXTERNAL SERIAL ATA CONNECTOR
(2) TAIL CONSTRUCTION TYPE
L : R/A DIP TYPE
(3) NO. OF POSITION:
07 :7POSITIONS
(4) CONTACT &CONNECTING TYPES:
MP : PLUG ,METAL SHELL TYPE
(5) COLOR CODES:
3 :BLACK
N :DARK RED
(6) PLATING OF CONTACT :
0 : GOLD FLASH OVER NICKEL
2 : 15u"GOLD OVER NICKEL
3 : 30u"GOLD OVER NICKEL
(7) TAIL LENGTH :
8 : SOLDER TAIL LENGTH A=2.1mm
B : SOLDER TAIL LENGTH A=3.1mm
(8) SUFFIX NO1 :
B : WITHOUT LOGO

NOTE:
1.MATERIAL:
HOUSING:HIGH TEMPERATURE THERMOPLASTIC,UL94V-0
CONTACT:BRASS,GOLD PLATING OVER NICKEL ON CONTACT AREA.TIN PLATING ON SOLDER AREA
SHELL:BRASS,NICKEL PLATED
2.MECHANICAL:
INSERTION FORCE: 4.5Kgf Max.
WITHDRAWAL FORCE: 1Kgf Min.
DURABILITY: 2500 CYCLES
3.ELECTRICAL SPECIFICATION:
OPERATION VOLTAGE: 100V AC Max.
CURRENT RATING: 1.5A PER CONTACT
CONTACT RESISTANCE: 45m ohm Max.
AFTER PHYSICAL AND ENVIRONMENTAL TESTING.
INSULATION RESISTANCE: 1000M OHM Min.
DIELECTRIC WITHSTANDING VOLTAGE: 500V AC
4.ENVIRONMENTAL:
OPERATION TEMPERATURE: -25°C~+85°C

PART NO.			
MATERIAL	TOLERANCE UNSPECIFIED .0 0 0 ± 0.20 .0 0 ± 0.25 .0 ± 0.38 . ± ANGLE ± 2°	FREEPORT	
		SCALE 1:1	UNIT MM
FINISH	Draw MWLin 4/18 06'	NAME SATA II 7PIN PLUG RIGHT ANGLE DIP TYPE (METAL SHELL TYPE)	SHEET 1/1
	Designer		
	Checked Peterhu	Drawing No. R-S16SA-41	REV. 1.0
	Approved John		

A4 RS16SA411