© COPYRIGHT 1997 BY SPC TECHNOLOGY. ALL RIGHTS RESERVED NO PORTION OF THIS PUBLICATION, WHETHER IN WHOLE OR IN PART CAN BE REPRODUCED WITHOUT THE EXPRESS WRITTEN CONSENT OF SPC TECHNOLOGY.

REVISIONS

DOC. NO. SPC-FD05, Total Pages: 2
Effective: 3/3/97, DCP No: 103 Supersedes DCP No: 97

DCP #	REV	DESCRIPTION	DRAWN	DATE	CHECKD	DATE	APPRVD	DATE
428	B	CHANGE ELECTRONIC FILE NAME	DJC	2/12/98	JC	2/17/98	JC	2/17/98
565	C	REMOVED FLATS FROM ITEM 1	DJC	7/2/98	JC	7/6/98	JC	7/6/98

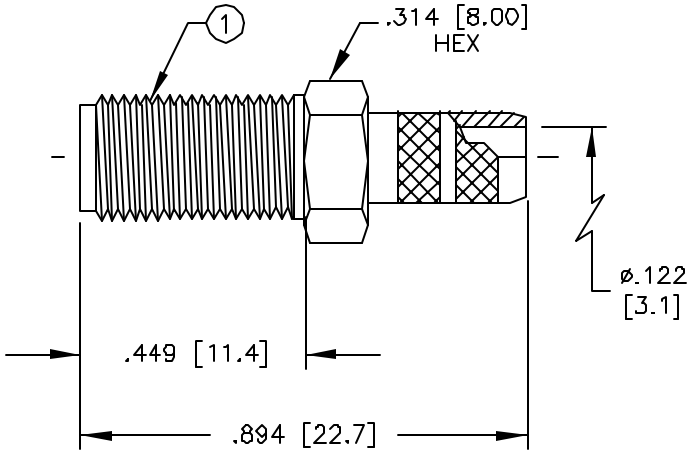

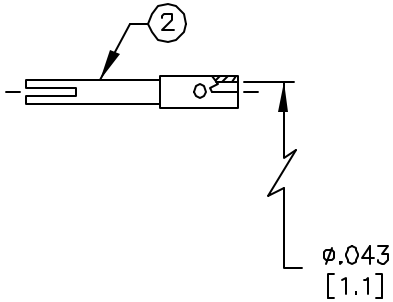

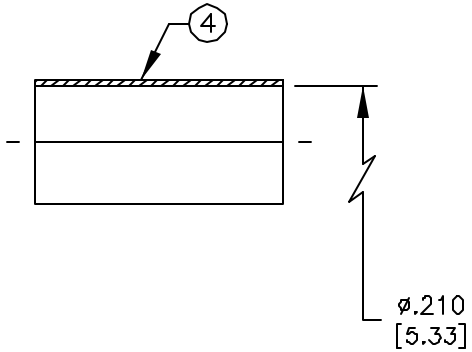

SPECIFICATIONS:

IMPEDANCE: 50 OHMS
WORKING VOLTAGE: 375 PEAK @ SEA LEVEL
FREQUENCY RANGE: 0–12.4 GHz
INSERTION LOSS: ≤–.2 dB @ 6 GHz
VSWR MAX: 1.3:1 @ 12 GHz
FOR RG–58, 58A, 58C, 141, 141A, 400/U, BELDEN 8240, 8259, 8262, 9201, 9203, 9310, 9311, COMM/SCOPE 0268 & CUSHCRAFT ULTRALINK TL92463E
INTERFACE PER MIL–STD–348A, SECTION 310.2

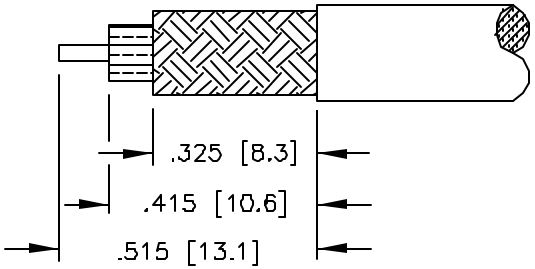

SUGGESTED STRIPPING INSTRUCTIONS
RECOMMENDED CRIMP DIE: .213
CONTACT TO BE SOLDERED

ITEM	DESCRIPTION	QTY	MATERIAL	FINISH
4	FERRULE	1	BRASS	NICKEL
3	DIELECTRIC	1	TEFLON	NONE
2	CONTACT	1	BERILLIUM COPPER	GOLD
1	BODY	1	BRASS	NICKEL

DISCLAIMER
ALL STATEMENTS AND TECHNICAL INFORMATION CONTAINED HEREIN ARE BASED UPON INFORMATION AND/OR TESTS WE BELIEVE TO BE ACCURATE AND RELIABLE. SINCE CONDITIONS OF USE ARE BEYOND OUR CONTROL, THE USER SHALL DETERMINE THE SUITABILITY OF THE PRODUCT FOR THE INTENDED USE AND ASSUME ALL RISK AND LIABILITY WHATSOEVER IN CONNECTION THEREWITH.

DIMENSIONS ARE FOR REFERENCE PURPOSES ONLY.

DRAWN BY:	DATE:
DANIEL CAREY	4/1/97
CHECKED BY:	DATE:
JOHN COLE	4/8/97
APPROVED BY:	DATE:
BRETT BRAATZ	4/16/97

SPC TECHNOLOGY
CHICAGO, IL 60640-1496

DRAWING TITLE: SMA FEMALE CRIMP

SIZE	DWG. NO.	CAD FILE	REV
A	8589-0836	16N2718.DWG	C

SCALE: NTS | U.O.M.: INCHES [mm] | SHEET: 1 OF 1

SPC-FD05.DWG