SCHAFFNER

Compact power entry module

FN 280

- current rating from 1 to 10A
- IEC 950-compliant
- general-purpose application
- for one or two fuses (Ø5 x 20 mm)

- Nennstrom von 1 bis 10A
- IEC 950 konform
- Universeller Einsatz
- Für eine oder zwei Sicherungen (Ø5 x 20 mm)

- courant de service entre 1 et 10A
- conforme à CEI 950
- applications universelles
- pour un ou deux fusibles (Ø5 x 20 mm)

Filter selection table

Choose the family **FN xxx** with the required body style and features, and add **-??** to determine current rating, and **/??** for output connections. Example: FN 284-1/06 is a horizontal screw-mounting filter for twin fuses, rated for 1A, with fast-on outputs.

Approvals

EN 133200
IEC 60939

Family	Current ratings A at 40°C (25°) 1 (1.2)	2 (2.4)	4 (4.8)	6 (7.2)	10 (12)	Output	Housing style			For fuse(s) Nbr.
FN 281 -?? /??	-1	-2	-4	-6	-10	/06	✓			1
FN 282 -?? /??	-1	-2	-4	-6	-10	/06	✓			2
FN 283 -?? /??	-1	-2	-4	-6	-10	/06		✓		1
FN 284 -?? /??	-1	-2	-4	-6	-10	/06		✓		2
FN 285 -?? /??	-1	-2	-4	-6	-10	/06			✓	1
FN 286 -?? /??	-1	-2	-4	-6	-10	/06			✓	2
	Inductance L mH									
	7.5	2	1	0.45	0.34					

Additional specifications

Filter type	Capacitance Cx nF	Cy nF	Maximum leakage µA/phase	Res. R MΩ	Weight g	Maximum operating voltage VAC	Hz	Operating frequency Hz	Hipot test voltage PN→E VAC	P→N VAC
All standard types	220	2.2	190	1	140	250	50/60	50 to 400	2000	760
B types (medical)	220	-	2	1	140	250	50/60	50 to 400	2500	760

MTBF at 40°C, 230V, per Mil-HB-217F: 1,500,000 hours

Electrical schematics

FN 281/283/285
FN 282/284/286 (have second fuse, shown dotted)

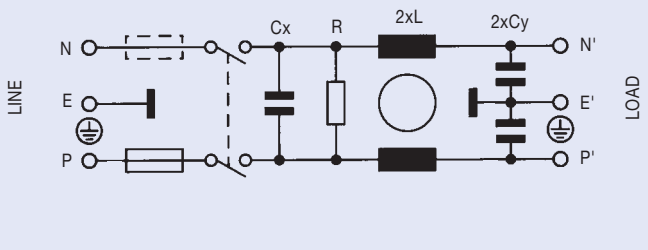

See tables for component values

FN 280 insertion loss

Per CISPR 17; A = 50Ω/50Ω sym, B = 50Ω/50Ω asym, C = 0.1Ω/100Ω sym, D = 100Ω/0.1Ω sym

1 amp types

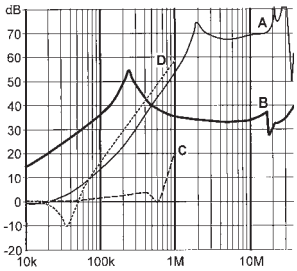

2 amp types

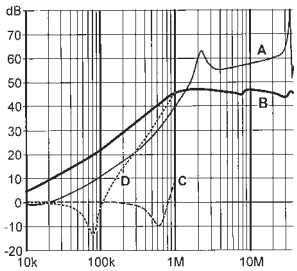

4 amp types

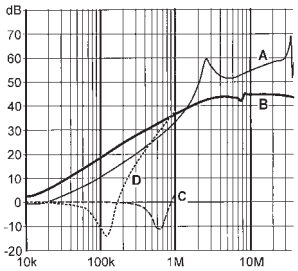

6 amp types

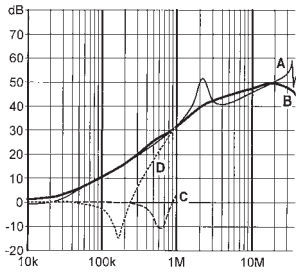

10 amp types

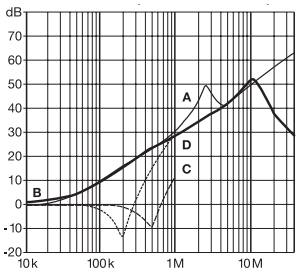

Mechanical data

	FN 281 FN 282	FN 283 FN 284	FN 285 FN 286	Tol. mm
A	32	50	32	± 0.3
B	82	65		± 0.3
C	72	40		± 0.1
D	43.1		43.6	± 0.3
F	5.5		5	± 0.3
H	⊆3.3			-
M	R≤2.5			-
N	60.8		61.6	± 0.1
P	29.3			± 0.2
R	M3			-
S	90°			-

Panel thickness FN 285 / FN 286: 0.8-3 mm

FRONT

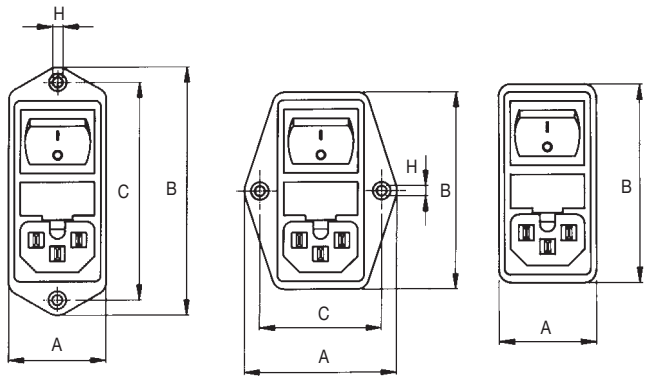

FN 281, 282 FN 283, 284 FN 285, 286

PANEL CUT-OUT

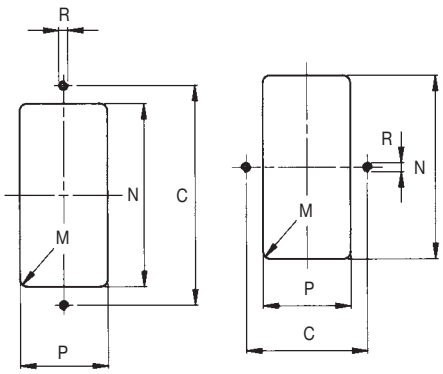

SIDE

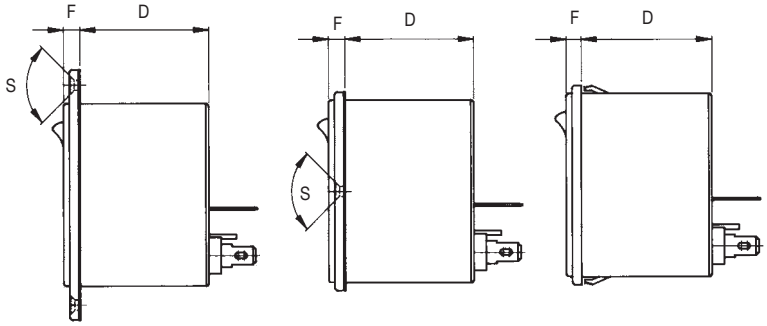

All dimensions in mm; 1 inch = 25.4mm

IEC-inlet filters

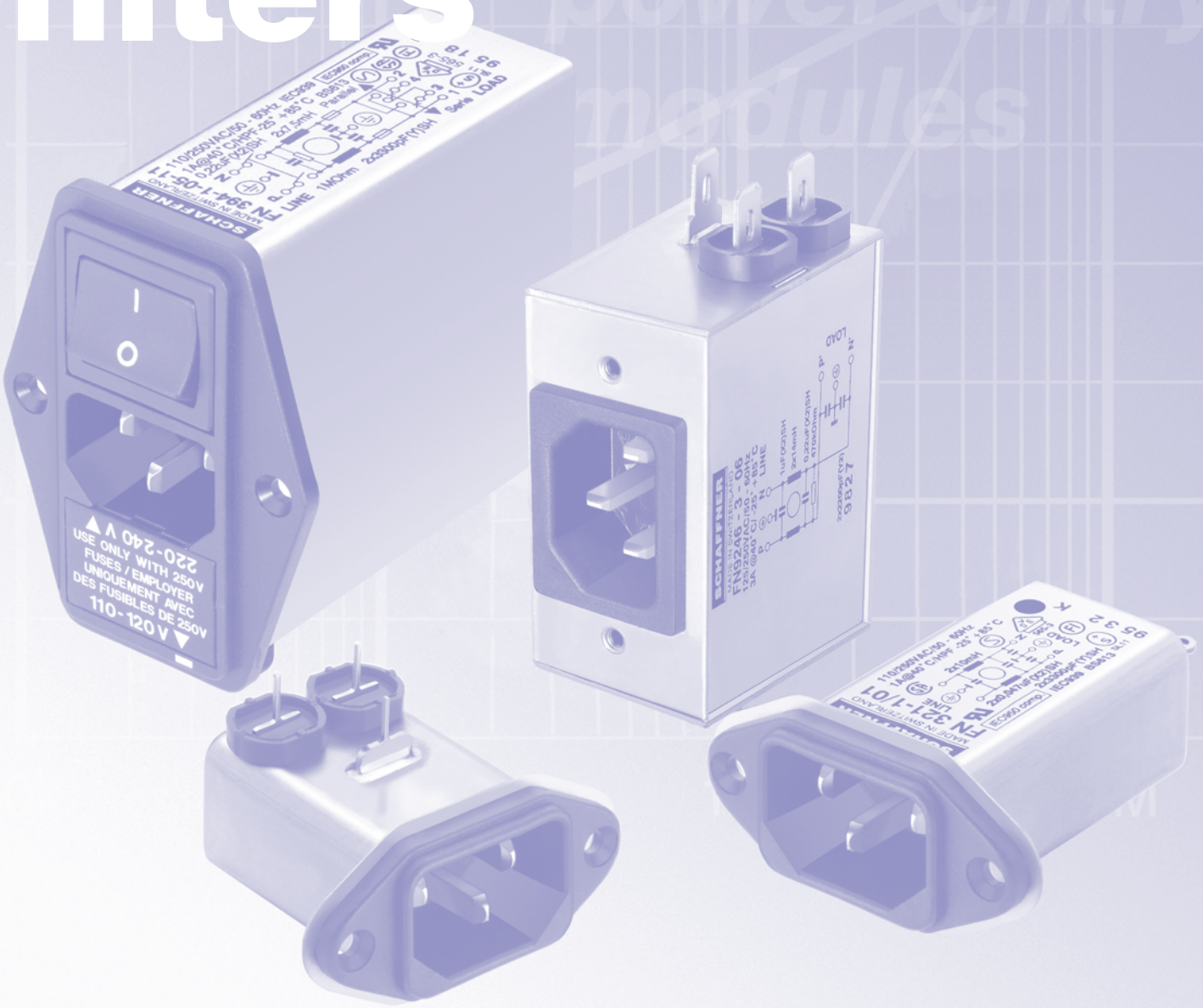

SCHAFFNER

IEC-inlet filters

CONTENTS

INHALT

TABLE DES MATIÈRES

IEC-inlet filters

Time-to-Market

The most important reasons for choosing a catalog product lies in the rapid availability and the associated safety acceptances. Filter circuits with discrete components at the mains input can, of course, be built but do not necessarily represent the best solution particularly in products with a compressed development cycle such as in the PC field.

Standard IEC connector filters are a practical single-source solution. Thanks to their compact dimensions and supplementary options they offer numerous advantages to the user.

The following summary provides a simple and rapid means for making a filter pre-selection. Detailed information concerning the individual filters is given on the subsequent pages. Variants having an earth choke are designated by the letter “E” (e.g. FN 393E) and filters for medical applications by the letter “B” (e.g. FN 385B).

General technical information

Insertion loss

The insertion loss characteristics of the filters are measured in accordance with the CISPR 17 standard. Two test conditions are specified in Section 4.2 of the CISPR 17 standard namely input and output impedances of 50/50K and 0.1/100K. In general, the IEC inlet filters perform the same in the face of differential interference as in the 50K insertion loss test. In order to show the performance under realistic conditions, Schaffner also shows the attenuation curves obtained from the 0.1/100K test which are more meaningful for common mode interference. The inductance of the chokes used in the filters can change under load because of a saturation effect which can also affect the insertion loss.

Voltage ratings

The use of capacitors in accordance with IEC 384-14 means that Schaffner filters can be operated at voltages up to 10% over the nominal voltage rating.

Leakage current

The figure quoted for the leakage current to ground indicates the maximum value per phase at 230V/50Hz.

Switches

The switches used in the filters listed in this catalog have an in-rush current rating of up to 51A as defined in UL 1045, TV3.

Flammability classification

All the filters in this catalog comply with the requirements of UL 94V2 or UL 94V0.

Climatic classification

The filters made by Schaffner comply with the climatic classification 25/085/21 according to DIN IEC 68 Part 1 (ambient temperature -25°C to +85°C).

Component tolerances

	-Tol.	+Tol.	Test
Inductance	30%	50%	1kHz
Capacitance	20%	20%	1kHz
Resistance	10%	10%	DC

Current ratings

The nominal currents stated refer to an ambient temperature of 40°C. The maximum operating current at any other ambient temperature can be calculated by means of the following formula:

$$I = I_N \sqrt{(85 - \vartheta)/45}$$

Schaffner filters with IEC inlets

It is easy to determine which family of filters would be suitable for your particular application on the basis of the current range and insertion loss values together with the more important remarks shown at the right. Detailed technical information concerning each filter family can be found on the following pages.

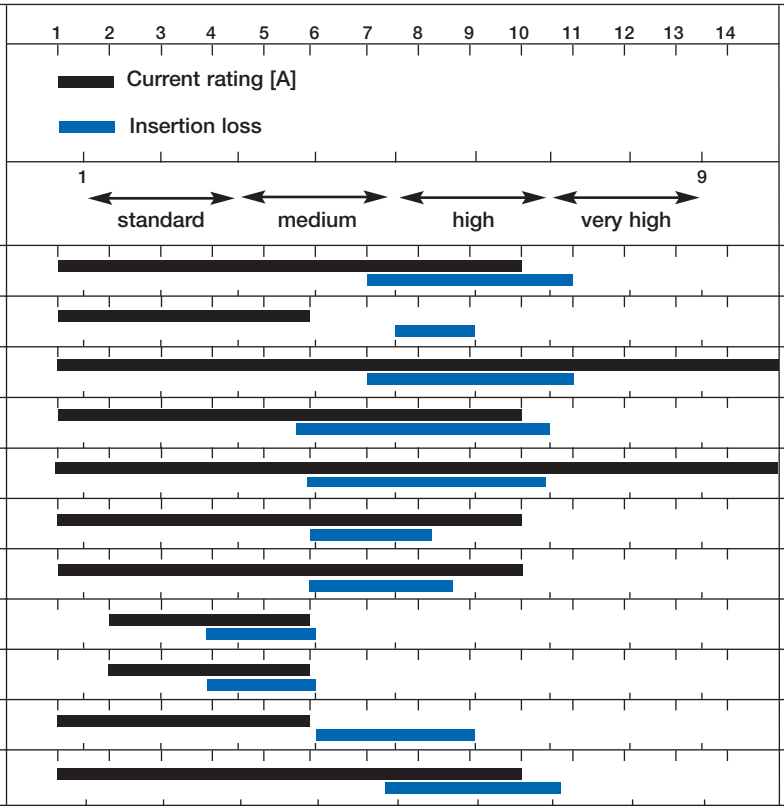

Family	with earth line choke	for fuse(s)	with switch	with voltage selector	for switch mode power suppl.	for medical equipment	IEC 950-compliant	for PCB mounting	snap-in version	catalog page
FN 321					✓		✓			64
FN 329	✓						✓			66
FN 9222					✓	✓	✓		✓	68
FN 9226						✓	✓	✓		72
FN 9246					✓	✓	✓			74
FN 9260		✓				✓	✓		✓	78
FN 280		✓	✓			✓	✓		✓	82
FN 370		✓		✓		✓	✓		✓	84
FN 380		✓	✓			✓	✓		✓	87
FN 390	✓	✓	✓	✓		✓	✓			90
FN 1390	✓	✓	✓	✓		✓	✓			90

Ordering information

FN 280, FN 321, FN 329, FN 9222, FN 9226, FN 9246, FN 9260

FN 9222 & - x / y

- connections
  - 01 = solder-lug
  - 02 = pin for PCB mounting
  - 05 = fast-on
  - 06 = solder-lug/fast-on combination
  - 07 = wire
  - standard connections see page 235
- current rating (A)
- B = medical version (without Y caps)
- E = earth line choke
- S = snap-in
- filter type

Examples:

FN 282-2/06	Type FN 282; current rating 2A; connection solder-lug/fast-on
FN 9222B-1/06	Type FN 9222; medical version; current rating 1 A; connection solder-lug/fast-on
FN 9222-10/07	Type FN 9222; current rating 10A; connection wire

FN 370

FN 379 & - 2 / x y

- fuse holder
  - 1 = for fuse 5⊆ x 20 (FUSE-H EUR-1)
  - 2 = for fuse 6.3⊆ x 32 (FUSE-H USA-1)
- voltage selector configuration
  - 2 = series/parallel 100/120/220/240V
- current rating (A)
- B = medical version (without Y caps)
- filter type

Examples:

FN 370-6/22	Type FN 370; current rating 6A; voltage selector series/parallel; fuse 6.3 x 32
FN 375B-4/21	Type FN 375; medical version; current rating 4A; voltage selector series/parallel; fuse 5 x 20

FN 380

FN 389 & - 6 / x y

- fuse holder
  - 1 = for fuse 5⊆ x 20 (FUSE-H EUR-1)
  - 2 = for fuse 6.3⊆ x 32 (FUSE-H USA-1)
- rocker switch type
  - 2 = 2-pole, dark (not illuminated) 250VAC (SWI-R 2D-1)
- current rating (A)
- B = medical version (without Y caps)
- filter type

Examples:

FN 380-2/22	Type FN 380; current rating 2A; 2-pole rocker switch; fuse 6.3 x 32
FN 389B-6/21	Type FN 389; medical version; current rating 6A; 2-pole rocker switch; fuse 5 x 20

FN 390

FN 393 E - 1 - 05 / 1 1

- voltage selector 110/230V
- 2-pole rocker switch
- connections fast-on
- current rating (A)
- earth line choke
- filter type

Example:

FN 394E-2.5-05/11	Type FN 394; with earth line choke; current rating 2.5A; connection fast-on; 2-pole rocker switch; voltage selector 110/230V