Alle Rechte vorbehalten/ *All rights reserved*

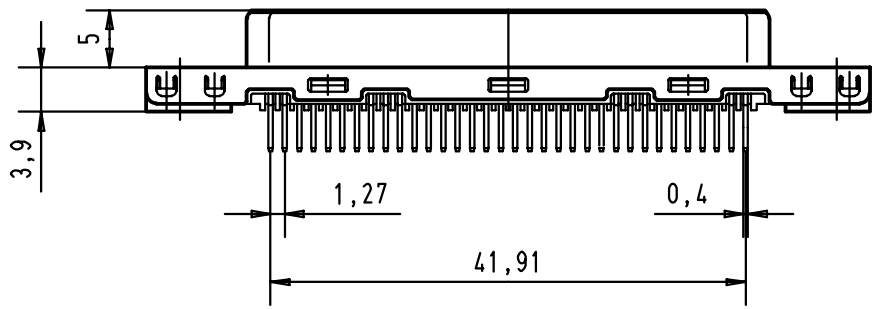

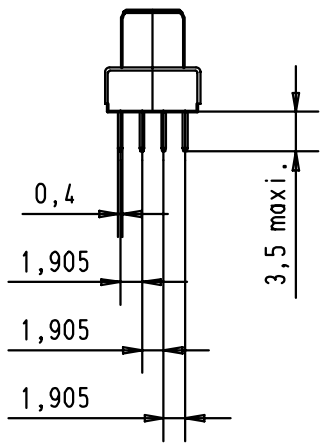

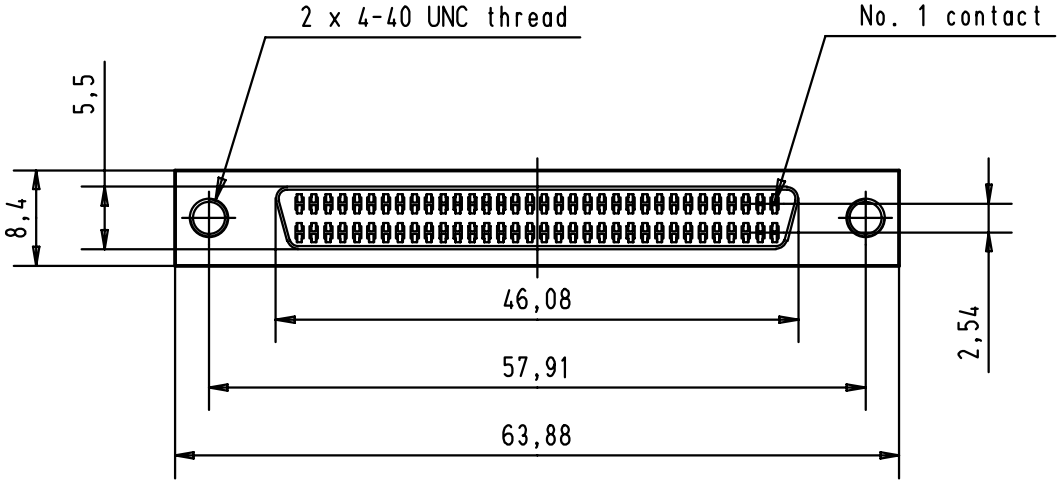

Printed Board Layout
component side

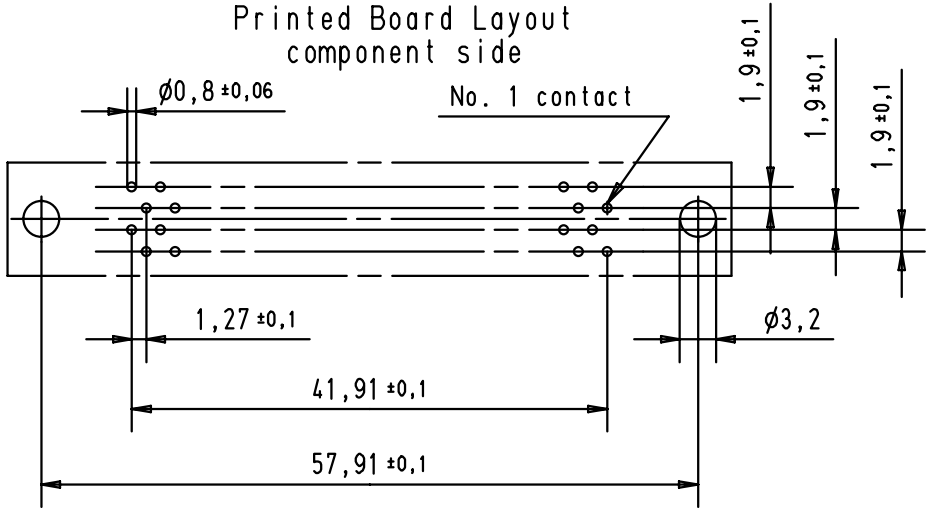

				Dat.	Name			Maßstab/ *Scale*
			Detail.	30-AUG-00	Alspace	All Dim. in mm Orig. Size DIN A 4	*har.mik®* I/O pin/socket S.C.S.I-3 68 poles female connector straight solder with 4-40 UNC thread	1,5:1
			Insp.					
			Stand.					
27941	30-AUG-00	Alspace	HARTING EURL F-95972 Paris				TB 60 02 068 5120	Blatt/*Page* 1/1
Mod.	Dat.	Name					Sub.	