5.08mm (.200") Pitch KK®
PC Board Connector

3002
Top Entry Mount Style C

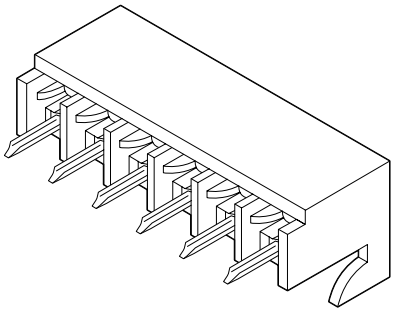

FEATURES AND SPECIFICATIONS

Features and Benefits
- Sizes 2 to 20 circuits

Reference Information
Product Specification: PSX10-39
Packaging: Tray
UL File No.: E29179
CSA File No.: LR19980
Mates With: 2599, 3003 and 3008 headers
Designed In: Inches

Electrical
Voltage: 250V
Current: 7.0A
Contact Resistance: 20mΩ max.
Dielectric Withstanding Voltage: 1500V
Insulation Resistance: 500K MΩ min.

Mechanical
Mating Force: 24 oz max.
Unmating Force: 4 oz min.
Normal Force: 350g
Durability: 25 cycles Tin

Physical
Housing: Nylon, UL 94V-2
Contact: Phosphor Bronze
Plating: 1µm Tin/Lead and 0.5µm Gold
Operating Temperature: 0 to +75˚C

CATALOG DRAWING (FOR REFERENCE ONLY)

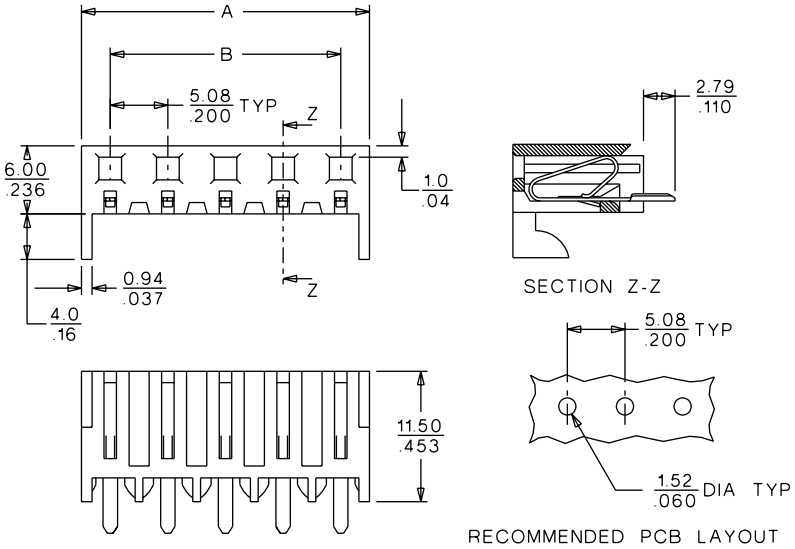

ORDERING INFORMATION AND DIMENSIONS

Circuits	Order No.		Dimension	
	Tin	Gold	A	B
2	10-10-1023	10-10-1028	10.16 (.400)	5.08 (.200)
3	10-10-1033	10-10-1038	15.24 (.600)	10.16 (.400)
4	10-10-1043	10-10-1048	20.32 (.800)	15.24 (.600)
5	10-10-1053	10-10-1058	25.40 (1.000)	20.32 (.800)
6	10-10-1063	10-10-1068	30.48 (1.200)	25.40 (1.000)
7	10-10-1073	10-10-1078	35.56 (1.400)	30.48 (1.200)
8	10-10-1083	10-10-1088	40.64 (1.600)	35.56 (1.400)
9	10-10-1093	10-10-1098	45.72 (1.800)	40.64 (1.600)
10	10-10-1103	10-10-1108	50.80 (2.000)	45.72 (1.800)
11	10-10-1113	10-10-1118	55.88 (2.200)	50.80 (2.000)

Circuits	Order No.		Dimension	
	Tin	Gold	A	B
12	10-10-1123	10-10-1128	60.96 (2.400)	55.88 (2.200)
13	10-10-1133	10-10-1138	66.04 (2.600)	60.96 (2.400)
14	10-10-1143	10-10-1148	71.12 (2.800)	66.04 (2.600)
15	10-10-1153	10-10-1158	76.20 (3.000)	71.12 (2.800)
16	10-10-1163	10-10-1168	81.28 (3.200)	76.20 (3.000)
17	10-10-1173	10-10-1178	86.36 (3.400)	81.28 (3.200)
18	10-10-1183	10-10-1188	91.44 (3.600)	86.36 (3.400)
19	10-10-1193	10-10-1198	96.52 (3.800)	91.44 (3.600)
20	10-10-1203	10-10-1208	101.60 (4.000)	96.52 (3.800)

Plating: 1.00 microns Tin/Lead /2.00 microns Copper min. (.000040" Tin/Lead /.000080" Copper min.) or 0.50 microns Gold/0.75 microns Nickel min. (.000020" Gold/.000030" Nickel min.)