THIS DRAWING IS UNPUBLISHED. RELEASED FOR PUBLICATION -,- .
© COPYRIGHT 2002 BY TYCO ELECTRONICS CORPORATION. ALL RIGHTS RESERVED.

LOC	DIST
E	B

REVISIONS

P	LTR	DESCRIPTION	DATE	DWN	APVD
	C	EBD0-0171-04	14-04-04	AM	FWK

Gland and Cap Assembly.

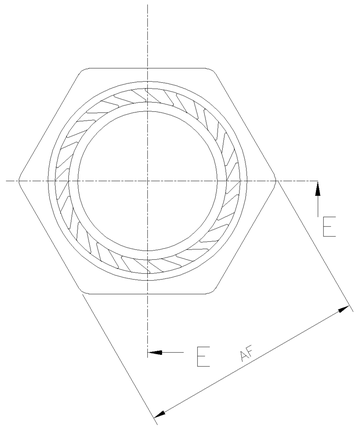

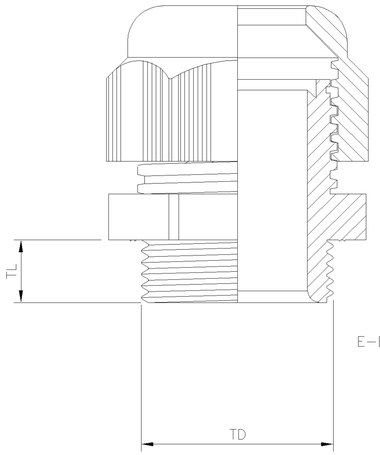

E–E SECTION

Lock Nut. (Supplied as Part of Kit

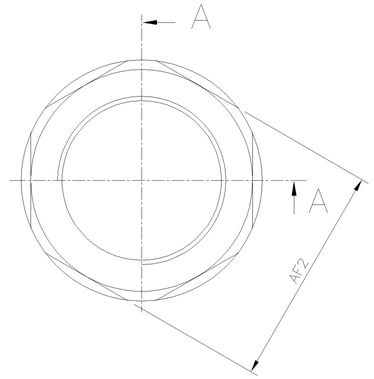

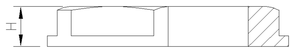

A–A

Washer. (Supplied as Part of Kit

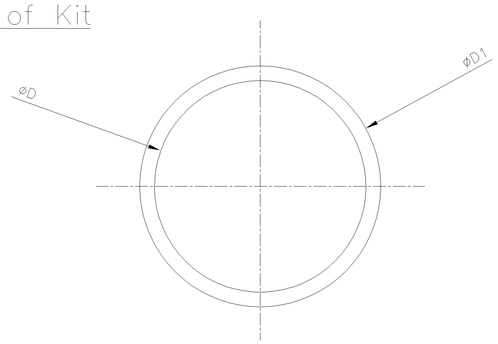

NOTES:

1. FOR TECHNICAL DATA REFER TO YOUR LOCAL TYCO ELECTRONICS SALES OFFICE.
2. ALL DIMENSIONS ARE NOMINAL FOR REFERENCE ONLY UNLESS OTHERWISE STATED.
3. FOR PACKAGING INFORMATION SEE PACKING SPECIFICATION 107-3293 TABLE ABOVE SHOWS PACKING LABEL DETAILS.
4. 1 KIT COMPRISES OF 1 OFF GLAND & CAP (AS SHOWN) INCLUDING NEOPRENE SEAL PLUS 1 WASHER AND LOCK NUT (AS SHOWN SEPARATELY)

3

Part No	Packing Label Description Line 1	Packing Label Description Line 2	Packing Label Description Line 3	Packing Label Description Line 4
1478769-1	Anti-Vibration Nylon Locking Gland	12mm Gland & lock Nut BLACK	IP68 * Zero Halogen * VDE	Cable Range (mm) 3.0-6.5
1478769-2	Anti-Vibration Nylon Locking Gland	16mm Gland & lock Nut BLACK	IP68 * Zero Halogen * VDE	Cable Range (mm) 5.0-10.0
1478769-3	Anti-Vibration Nylon Locking Gland	20mm Gland & lock Nut BLACK	IP68 * Zero Halogen * VDE	Cable Range (mm) 6.0-12.0
1478769-4	Anti-Vibration Nylon Locking Gland	20mm Gland & lock Nut BLACK	IP68 * Zero Halogen * VDE	Cable Range (mm) 10.0-14.0
1478769-5	Anti-Vibration Nylon Locking Gland	25mm Gland & lock Nut BLACK	IP68 * Zero Halogen * VDE	Cable Range (mm) 13.0-18.0
1478769-6	Anti-Vibration Nylon Locking Gland	32mm Gland & lock Nut BLACK	IP68 * Zero Halogen * VDE	Cable Range (mm) 18.0-25.0
1478769-7	Anti-Vibration Nylon Locking Gland	40mm Gland & lock Nut BLACK	IP68 * Zero Halogen * VDE	Cable Range (mm) 22.0-32.0
1478769-8	Anti-Vibration Nylon Locking Gland	50mm Gland & lock Nut BLACK	IP68 * Zero Halogen * VDE	Cable Range (mm) 30.0-38.0
1478769-9	Anti-Vibration Nylon Locking Gland	63mm Gland & lock Nut BLACK	IP68 * Zero Halogen * VDE	Cable Range (mm) 34.0-44.0

Part No	Gland & Cap Assembly			Locknut		Washer		
	Dim TL	Dim TD	Dim AF	Dim H	Dim AF2	D	D1	S
1478769-1	8	12	15	5	18	11.85±0.2	15.7±0.2	1.1±0.2
1478769-2	10	16	22	5	22	15.7±0.2	25.8±0.2	1.6±0.2
1478769-3	10	20	24	6	26	19.7±0.2	26.7±0.2	1.6±0.2
1478769-4	10	20	27	6	26	19.7±0.2	26.7±0.2	1.6±0.2
1478769-5	10	25	33	6	32	24.7±0.2	31.6±0.2	1.5±0.2
1478769-6	18	32	42	7	41	31.9±0.2	41.6±0.2	1.5±0.2
1478769-7	18	40	53	7	50	39.9±0.2	49.6±0.2	1.5±0.2
1478769-8	18	50	60	8	60	49.9±0.2	62.7±0.3	1.5±0.2
1478769-9	18	63	65	8	75	63.0±0.2	$75.1^{+0.3}_{-0.2}$	1.5±0.2

Inner Carton Qty.	Bag Qty.	Cable Range (mm)	Lock Nut Part No.	Description.	Colour.	Kit Part No.
10	2	34.0 – 44.0	1478676-8	63mm Gland + Locknut	Black	1478769-9
10	2	30.0 – 38.0	1478676-7	50mm Gland + Locknut	Black	1478769-8
10	2	22.0 – 32.0	1478676-6	40mm Gland + Locknut	Black	1478769-7
30	5	18.0 – 25.0	1478676-5	32mm Gland + Locknut	Black	1478769-6
50	5	13.0 – 18.0	1478676-4	25mm Gland + Locknut	Black	1478769-5
100	5	10.0 – 14.0	1478676-3	20mm Gland + Locknut	Black	1478769-4
100	5	6.0 – 12.0	1478676-3	20mm Gland + Locknut	Black	1478769-3
100	5	5.0 – 10.0	1478676-2	16mm Gland + Locknut	Black	1478769-2
100	5	3.0 – 6.5	1478676-1	12mm Gland + Locknut	Black	1478769-1

1478769

THIS DRAWING IS A CONTROLLED DOCUMENT.

DIMENSIONS: mm

TOLERANCES UNLESS OTHERWISE SPECIFIED:
0 PLC ± –
1 PLC ± –
2 PLC ± –
3 PLC ± –
4 PLC ± –
ANGLES ± –

MATERIAL –

FINISH –

DWN A.J.Beken 30-04-02
CHK P.Bates 08-05-02
APVD P.Bates 08-05-02
PRODUCT SPEC –
APPLICATION SPEC –
WEIGHT –

tyco Electronics
Tyco Electronics Corporation
Bideford, UK, EX39 4HE

NAME
METRIC ANTI-VIBRATION GLAND & LOCK NUT KIT
NYLON – BLACK
12 – 63mm RANGE

SIZE A2 | CAGE CODE 00779 | DRAWING NO C-1478769 | RESTRICTED TO –

CUSTOMER DRAWING | SCALE 1:1 | SHEET 1 OF 1 | REV C