REVISION DC

DO NOT SCALE FROM THIS PRINT

NOTES:

1. MINIMUM PUSHOUT FORCE TO BE 12 OZ RETENTION FOR CONTACTS AND WELD TABS.
2. (C1) COPLANARITY: .004[.10] = POS 02 THRU 26
   .006[.15] = POS 27 THRU 50
3. NOTE DELETED.
4. © REPRESENTS A CRITICAL DIMENSION.
5. [ ] DIMENSIONS ARE IN MILLIMETERS.
6. MEASURED FROM BEND.
7. DIMENSION CHANGED PER REVISION AD. CONTACT ENGINEERING FOR INFORMATION.
8. SIDES OF PLASTIC BODIES ON ALL LEAD STYLES EXCEPT THE -01 & -02 WILL BE SOLID, NOT RIBBED.
9. MEASURE FROM TIPS OF PIN.
10. NOTE DELETED.
11. .003[.08] MAXIMUM TERMINAL BURR.
12. .005 MAXIMUM HEIGHT VARIATION BETWEEN ANY TWO PINS.
13. MINIMUM LOCKING CLIP RETENTION TO BE 8 OZS.
14. THIS FEATURE ONLY PRESENT ON -01 &-02 LEAD STYLES.

TFM-1XX-XX-XXX-X-XXX

No OF POSITIONS

LEAD STYLE -01: (-5 THRU -50 ALL POSITIONS AVAILABLE)
LEAD STYLE -02: (-5 THRU -50 ALL POSITIONS AVAILABLE)
ALL OTHER LEAD STYLES: (-5 THRU -50 MULTIPLES OF 5)
LEAD STYLES -11, -12 POS 12, 16, 17 ALSO AVAILABLE
LEAD STYLES -21, -22, -31, -32 POS 12 AND 13 ALSO AVAILABLE

LEAD STYLE

THROUGH HOLE	SURFACE MOUNT
-01,*-03 (SEE FIG. 1)	-02 (SEE FIG. 2)
-11,*-13 (SEE FIG. 1)	-12 (SEE FIG. 2)
-21,*-23 (SEE FIG. 1)	-22 (SEE FIG. 2)
-31,*-33 (SEE FIG. 1)	-32 (SEE FIG. 2)

PLATING SPECIFICATION

-S: SELECTIVE
-L: LIGHT SELECTIVE
-F: FLASHED GOLD
-P: GOLD FLASHED PALLADIUM NICKEL
-G: GOLD
-H: HEAVY GOLD
-SM: SELECTIVE HEAVY GOLD, MATTE TIN TAIL
-LM: SELECTIVE LIGHT GOLD, MATTE TIN TAIL
-FM: SELECTIVE FLASH GOLD, MATTE TIN TAIL
-STL: SELECTIVE TIN LEAD

BODY SPECIFICATION

-D: DOUBLE ROW

OPTION

-A: ALIGNMENT PIN (USE TFM-XX-D-XX-A, SEE TABLE 1) (SEE FIG. 8 SHEET 3) (NOT AVAILABLE FOR -RA OR -REX)
-LC: LOCKING CLIP (USE LC-05-TM) (NOT AVAILABLE FOR -RA OR -REX) (SEE FIG. 10 SHEET 3) (SEE NOTE 13)
-P: PICK AND PLACE PAD (USE PPP-04) (AVAILABLE IN ALL POSITIONS) (NOT AVAILABLE FOR -RA OR -REX, SEE FIG. 7 SHEET 3)
-RA: RIGHT ANGLE (AVAILABLE ONLY IN LEAD STYLE: -01 SEE FIG. 5, SHEET 2)
-TR: TAPE AND REEL (SEE FIG. 4, SHEET 5)
-SA: STAKED ALIGNMENT PIN (SEE FIG. 9, SHEET 3)(NOT AVAILABLE FOR -RA OR -RE)
-K: POLYIMIDE FILM (SEE FIG. 3)
-WT: WELD TABS (USE WT-25-XX-T) (AVAILABLE ON -01 AND -02 LEAD STYLES ONLY) (SEE FIG. 6 SHEET 2) (AVAILABLE ON -05, -07, -10, -15, -20, -25, AND -30 POS ONLY) (AVAILABLE WITH -L AND -S PLATING ONLY) (NOT AVAILABLE WITH -A, -LC, -RA, OR -SA OPTIONS)
-RE1: RIGHT ANGLE ELEVATED .062 PCB (USE TFM-XX-D-01-RE, NOT AVAILABLE WITHOUT -WT, AVAILABLE IN LEAD STYLE -01 ONLY,
* POS -31 THRU -50 NOT RELEASED) (SEE FIG. 11, SHEET 4)
-RE2: RIGHT ANGLE ELEVATED .093 PCB (USE TFM-XX-D-01-RE, NOT AVAILABLE WITHOUT -WT, AVAILABLE IN LEAD STYLE -01 ONLY,
* POS -31 THRU -50 NOT RELEASED) (SEE FIG. 11, SHEET 4)

*** NOT RELEASED FOR PRODUCTION**

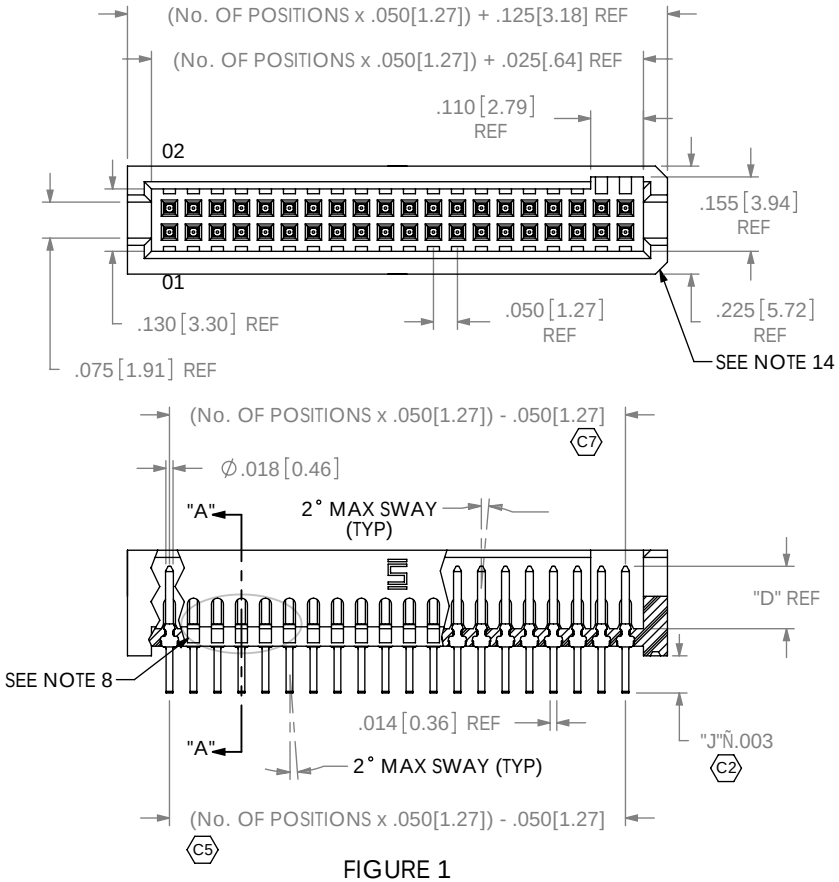

FIGURE 1
THROUGH HOLE
-01, -03, -11, -13, -21, -23, -31, -33

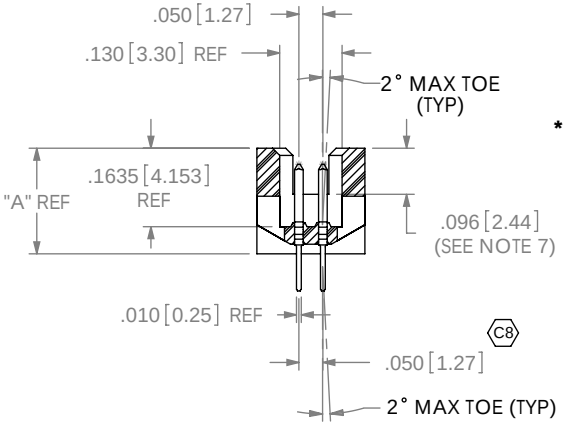

SECTION "A"-"A"

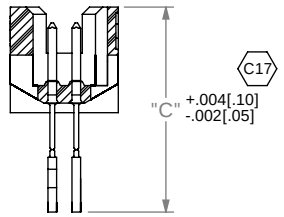

IN-PROCESS

TABLE 1								
LEAD STYLE	BODY	"A"	TERMINAL 1	TERMINAL 2	"C"	"D"	"E"	"J"
-01, -02	TFM-XX-D-01-XX	.2200 [5.588]	T-1R16-01-XX-2	N/A	0.427 [10.85]	0.133 [3.38]	0.230 [5.84]	0.078 [1.97]
-11, -12	TFM-XX-D-02-XX	.2900 [7.366]	T-1R20-03-XX	N/A	0.644 [16.36]	0.141 [3.58]	0.300 [7.62]	0.078 [1.97]
-21, -22	TFM-XX-D-03-XX	.3600 [9.144]	T-1R20-04-XX	N/A	0.644 [16.36]	0.141 [3.58]	0.370 [9.40]	0.078 [1.97]
-31, -32	TFM-XX-D-04-XX	.4350 [11.049]	T-1R20-02-XX	N/A	0.644 [16.36]	0.141 [3.58]	0.445 [11.30]	0.078 [1.97]
-01-RA	TFM-XX-D-01-XX	.2200 [5.588]	T-1R16-02-XX	T-1R16-03-XX	N/A	0.133 [3.38]	0.230 [5.84]	N/A N/A
-01-RE1	TFM-XX-D-01-RE	.2400 [6.096]	T-1R16-06-XX	T-1R16-07-XX	N/A	0.138 [3.51]	N/A	N/A N/A
-01-RE2	TFM-XX-D-01-RE	.2400 [6.096]	T-1R16-08-XX	T-1R16-09-XX	N/A	0.138 [3.51]	N/A	N/A N/A
*-03	TFM-XX-D-01-XX	.2200 [5.588]	T-1R16-10-XX	N/A	0.644 [16.36]	0.141 [3.58]	0.230 [5.84]	0.109 [2.77]
*-13	TFM-XX-D-02-XX	.2900 [7.366]	T-1R20-05-XX	N/A	0.644 [16.36]	0.141 [3.58]	0.300 [7.62]	0.109 [2.77]
*-23	TFM-XX-D-03-XX	.3600 [9.144]	T-1R20-06-XX	N/A	0.644 [16.36]	0.141 [3.58]	0.370 [9.40]	0.109 [2.77]
*-33	TFM-XX-D-04-XX	.4350 [11.049]	T-1R20-07-XX	N/A	0.774 [19.66]	0.141 [3.58]	0.445 [11.30]	0.109 [2.77]

UNLESS OTHERWISE SPECIFIED, DIMENSIONS ARE IN INCHES.
TOLERANCES ARE:
DECIMALS .XX: ±.01 [.3] .XXX: ±.005 [.13] .XXXX: ±.0020 [.051]
ANGLES 2°

PROPRIETARY NOTE
THIS DOCUMENT CONTAINS INFORMATION CONFIDENTIAL AND PROPRIETARY TO SAMTEC, INC. AND SHALL NOT BE REPRODUCED OR TRANSFERRED TO OTHER DOCUMENTS OR DISCLOSED TO OTHERS OR USED FOR ANY PURPOSE OTHER THAN THAT WHICH IT WAS OBTAINED WITHOUT THE EXPRESSED WRITTEN CONSENT OF SAMTEC, INC.

520 PARK EAST BLVD, NEW ALBANY, IN 47150
PHONE: 812-944-6733 FAX: 812-948-5047
e-Mail: info@SAMTEC.com code: 55322

MATERIAL: DO NOT SCALE DRAWING SHEET SCALE: 2.5:1
INSULATOR: LIQUID CRYSTAL POLYMER, COLOR: BLACK
TERMINAL: PHOSPHOR BRONZE

DESCRIPTION: .050 X .050 TERMINAL STRIP

DWG. NO. TFM-1XX-XX-XXX-X-XXX

BY: B RAY 7-10-2007 SHEET 1 OF 5

F:\DWG\MISC\MKTG\TFM-1XX-XX-XXX-X-XXX-MKT.SLDDRW

REVISION DC

FIGURE 2
SURFACE MOUNT
-02, -12, -22, -32
(DIFFERENT AS SHOWN, OTHERWISE SAME AS FIG. 1

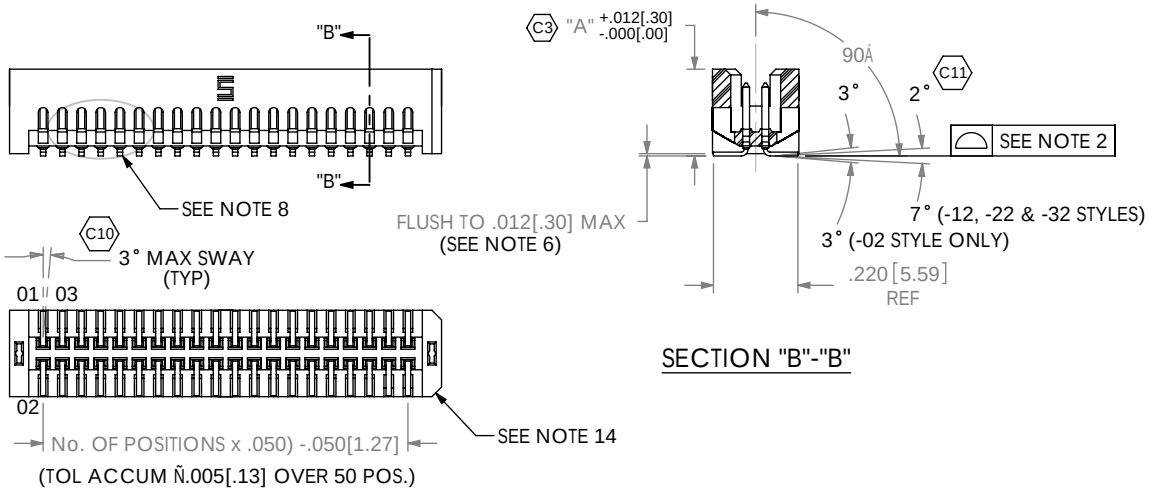

FIGURE 3
-K: POLYIMIDE FILM PAD

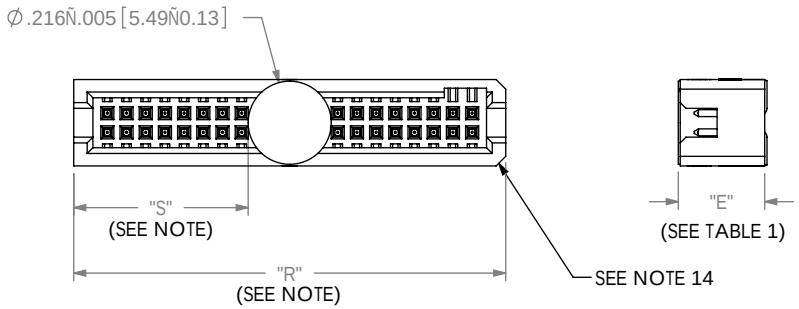

NOTE: òRó = OVERALL LENGTH (REF)
òSó = {(òRó - .216[5.49] /2} Ñ.020[.51]

FIGURE 5
-RA OPTION
DIFFERENT AS SHOWN, OTHERWISE SAME AS FIG. 1

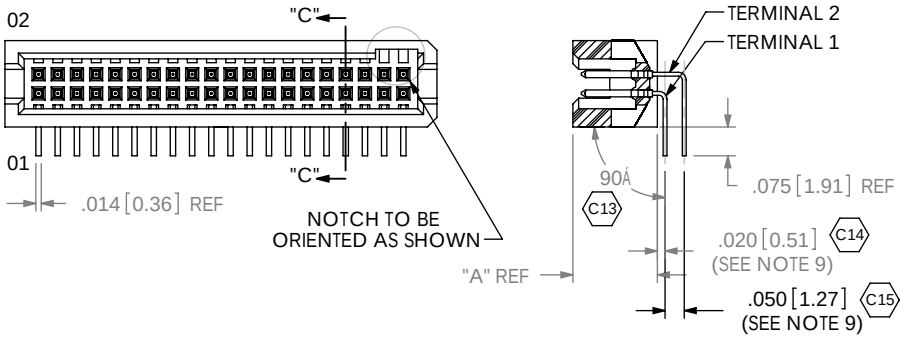

FIGURE 6
-WT OPTION
DIFFERENT AS SHOWN, OTHERWISE SAME AS FIG. 1

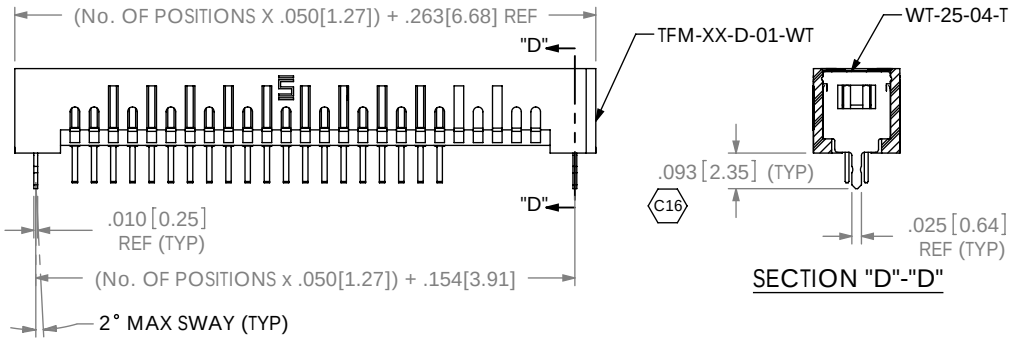

IN-PROCESS 1
(ORIENT I.D. MARK AS SHOWN)
(FOR -RA OPTION ONLY)

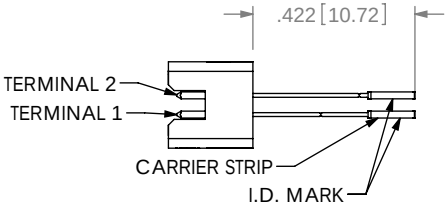

IN-PROCESS 2

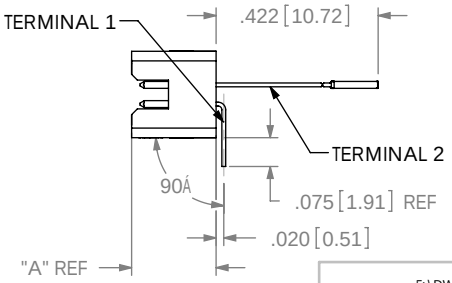

F:\DWG\MISC\MKTG\TFM-1XX-XX-XXX-X-XXX-MKT.SLDDRW

PROPRIETARY NOTE
THIS DOCUMENT CONTAINS INFORMATION CONFIDENTIAL AND PROPRIETARY TO SAMTEC, INC. AND SHALL NOT BE REPRODUCED OR TRANSFERRED TO OTHER DOCUMENTS OR DISCLOSED TO OTHERS OR USED FOR ANY PURPOSE OTHER THAN THAT WHICH IT WAS OBTAINED WITHOUT THE EXPRESSED WRITTEN CONSENT OF SAMTEC, INC.

DO NOT SCALE DRAWING

SHEET SCALE: 2:1

samtec
520 PARK EAST BLVD, NEW ALBANY, IN 47150
PHONE: 812-944-6733 FAX: 812-948-5047
e-Mail: info@SAMTEC.com code: 55322

DESCRIPTION: .050 X .050 TERMINAL STRIP

DWG. NO. TFM-1XX-XX-XXX-X-XXX

BY: B RAY 7-10-2007 SHEET 2 OF 5

REVISION DC

FIGURE 7
-P OPTION
DIFFERENT AS SHOWN, OTHERWISE SAME AS FIG. 1
(PAD TO BE POSITIONED ON C.L. AS SHOWN)

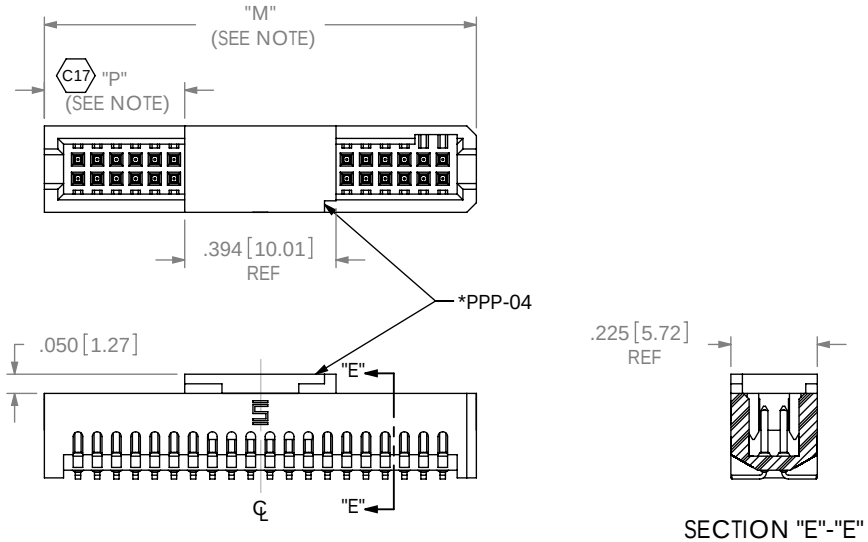

NOTE: òMó = (No. OF POSITIONS X .050[1.27]) + .125[3.18] (REF)
WITH -WT òMó = (No. OF POSITIONS X .050[1.27]) + .263[6.68] (REF)
òPó = {(òMó - .394[10.01]) /2} Ñ.020[.51]

* NOTCH ON PAD FOR 10 POSITION OR LESS TO BE ON SAME END AS THE NOTCH IN THE TFM BODY

FIGURE 8
-A OPTION
DIFFERENT AS SHOWN, OTHERWISE SAME AS FIG. 1

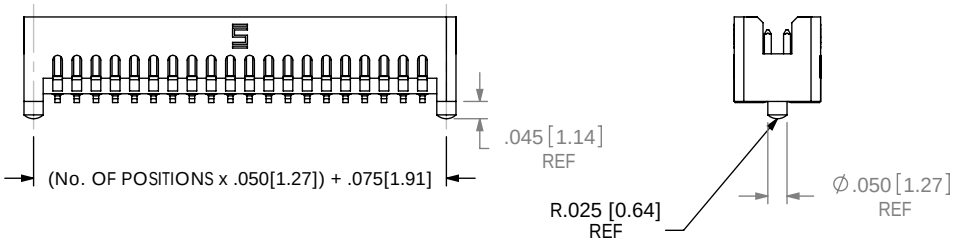

FIGURE 9
-SA OPTION: STAKED ALIGNMENT PIN
DIFFERENT AS SHOWN, OTHERWISE SAME AS FIG. 1

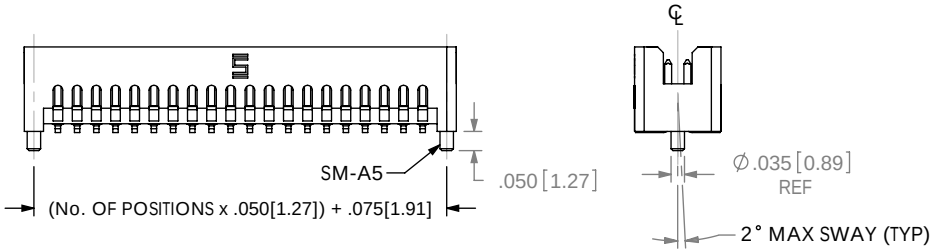

FIGURE 10
-LC OPTION
DIFFERENT AS SHOWN, OTHERWISE SAME AS FIG. 1
(NOT AVAILBLE ON -RA)

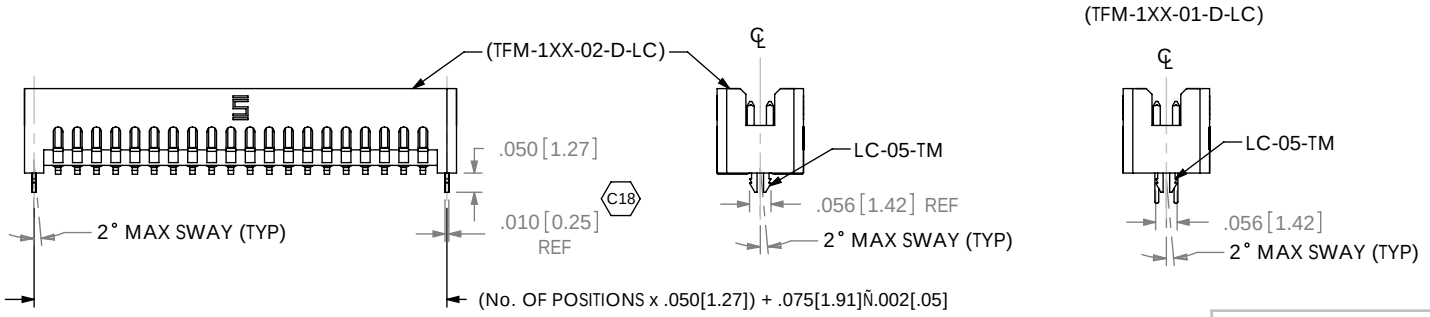

PROPRIETARY NOTE
THIS DOCUMENT CONTAINS INFORMATION CONFIDENTIAL AND PROPRIETARY TO SAMTEC, INC. AND SHALL NOT BE REPRODUCED OR TRANSFERRED TO OTHER DOCUMENTS OR DISCLOSED TO OTHERS OR USED FOR ANY PURPOSE OTHER THAN THAT WHICH IT WAS OBTAINED WITHOUT THE EXPRESSED WRITTEN CONSENT OF SAMTEC, INC.

DO NOT SCALE DRAWING

SHEET SCALE: 2:1

samtec
520 PARK EAST BLVD, NEW ALBANY, IN 47150
PHONE: 812-944-6733 FAX: 812-948-5047
e-Mail: info@SAMTEC.com code: 55322

DESCRIPTION: .050 X .050 TERMINAL STRIP

DWG. NO. TFM-1XX-XX-XXX-X-XXX

BY: B RAY 7-10-2007 SHEET 3 OF 5

F:\DWG\MISC\MKTG\TFM-1XX-XX-XXX-X-XXX-MKT.SLDDRW

REVISION DC

FIGURE 11

-REX: RIGHT ANGLE ELEVATED
TFM-120-XX-XXX-D-RE2 SHOWN
DIFFERENT AS SHOWN, OTHERWISE SAME AS FIG. 1
*** POSITIONS -31 THRU -50 NOT RELEASED FOR PRODUCTION**

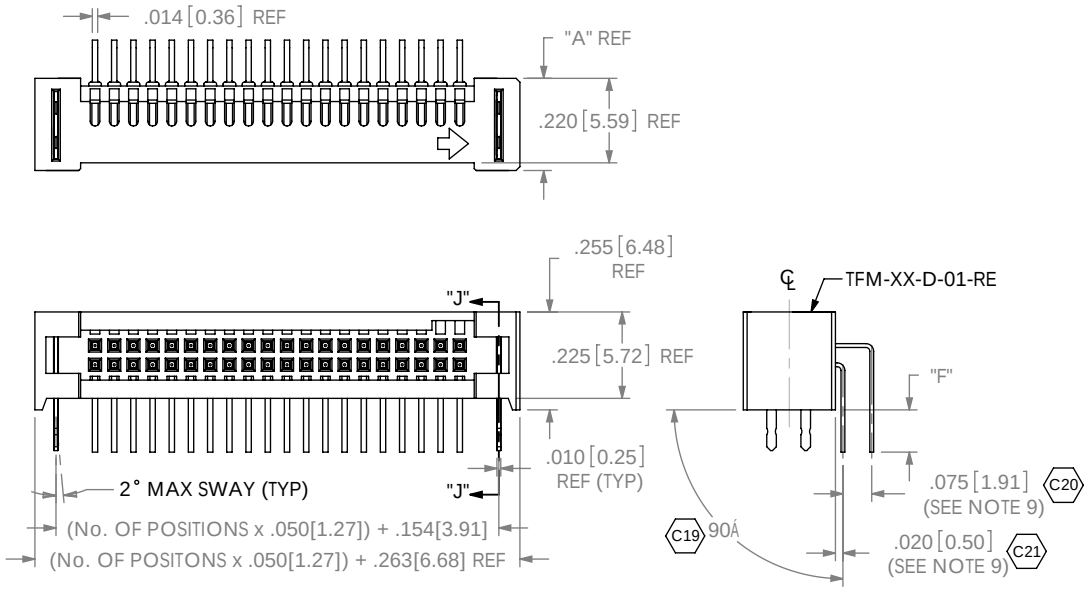

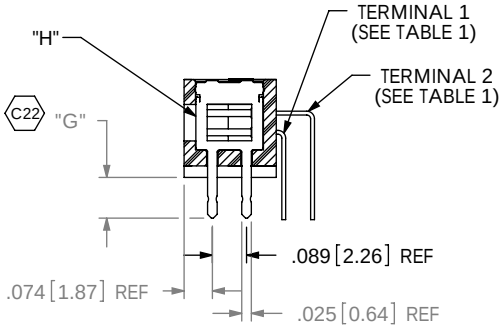

SECTION "J"-"J"

TABLE 3			
LEAD STYLE	"F"	"G"	"H"
-01-RE1	.078 [1.98]	.074 [1.88]	WT-25-05-T
-01-RE2	.110 [2.79]	.106 [2.69]	WT-25-06-T

IN-PROCESS 1

(ORIENT I.D. MARK AS SHOWN)
(FOR -RA OPTION ONLY)

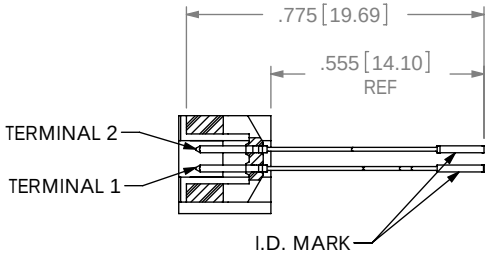

IN-PROCESS 2

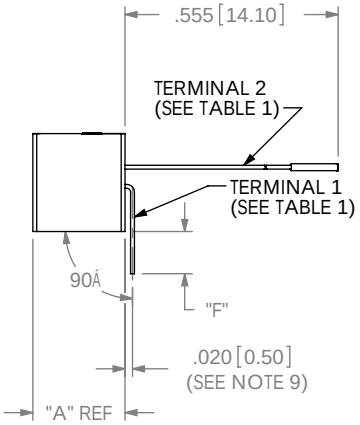

IN-PROCESS 3

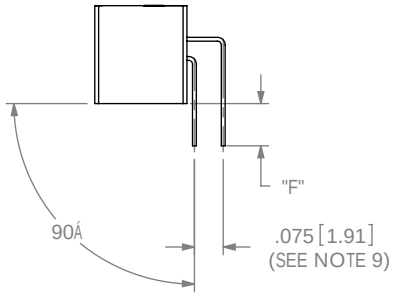

PROPRIETARY NOTE

THIS DOCUMENT CONTAINS INFORMATION CONFIDENTIAL AND PROPRIETARY TO SAMTEC, INC. AND SHALL NOT BE REPRODUCED OR TRANSFERRED TO OTHER DOCUMENTS OR DISCLOSED TO OTHERS OR USED FOR ANY PURPOSE OTHER THAN THAT WHICH IT WAS OBTAINED WITHOUT THE EXPRESSED WRITTEN CONSENT OF SAMTEC, INC.

DO NOT SCALE DRAWING

SHEET SCALE: 2:1

samtec
520 PARK EAST BLVD, NEW ALBANY, IN 47150
PHONE: 812-944-6733 FAX: 812-948-5047
e-Mail: info@SAMTEC.com code: 55322

DESCRIPTION: .050 X .050 TERMINAL STRIP

DWG. NO. TFM-1XX-XX-XXX-X-XXX

BY: B RAY 7-10-2007 SHEET 4 OF 5

F:\DWG\MISC\MKTG\TFM-1XX-XX-XXX-X-XXX-MKT.SLDDRW

REVISION DC

PARTS TO BE PACKAGED IN TUBES AS SHOWN

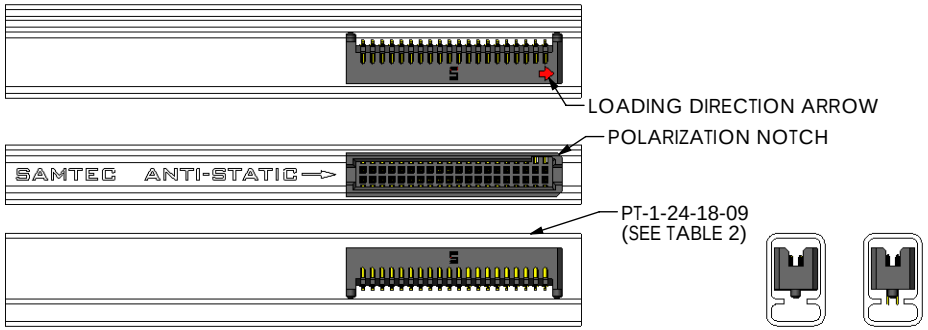

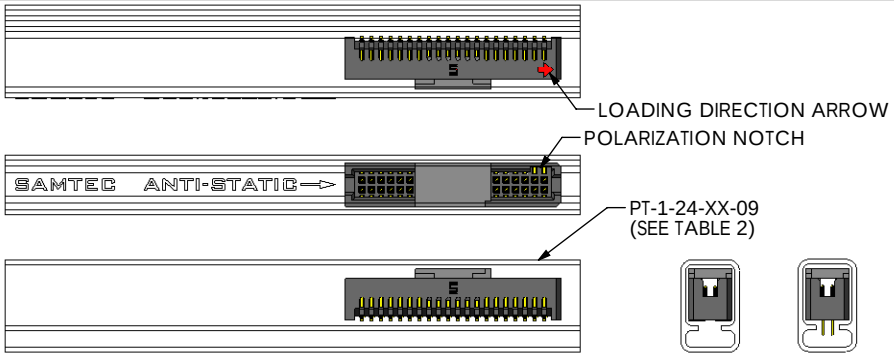

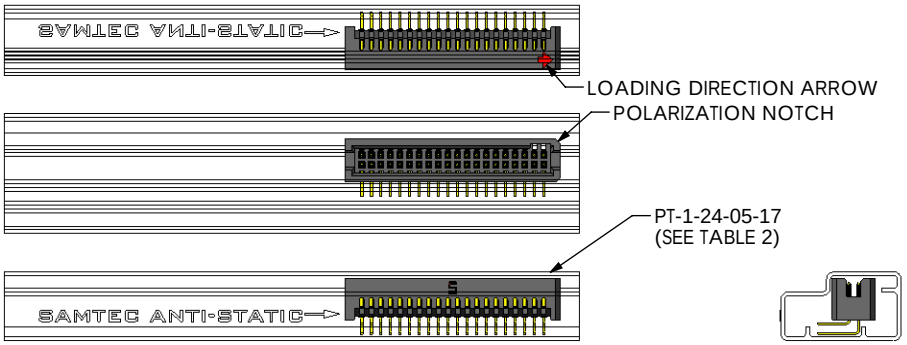

FIGURE 4
-TR: TAPE AND REEL

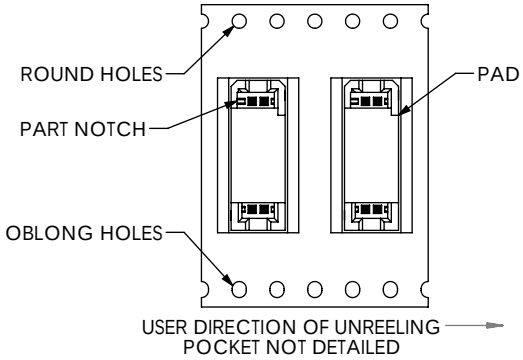

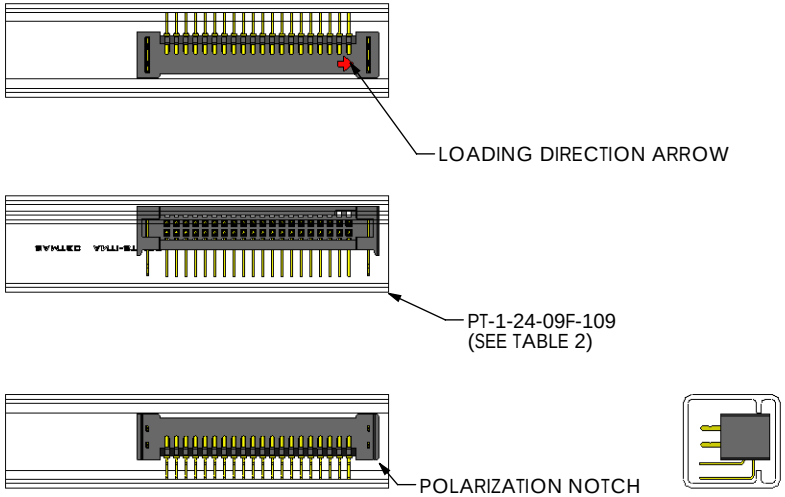

TABLE 2		
LEAD STYLE	PACKAGING TUBE	PLUG
-RA (ALL LEAD STYLES)	PT-1-24-5-17	TP-07
-REX	PT-1-24-09F-109	TP-29
-02, -02-A, -02-A-K, -02-LC	PT-1-24-01-09	TP-24
-12 (ALL OPTIONS), -22-K, -22, -22-A, -22-A-K, -22-LC, -22-LC-K	PT-1-24-04-09	TP-07
-02-A-P, -02-K, -02-LC-K, -02-LC-P, -02-P, -02-WT,	PT-1-24-18-09	TP-09
-01 (ALL OPTIONS), -11, -11-A, -11-LC, -11-K, -11-LC-K, -11-A-K		
-31-A-K, -31-A-P, -31-LC-P, -31-P, -32, -32-K, -32-A, -32-A-K,	PT-1-24-02-09	TP-07
-32-A-P, -32-LC-K, -32-LC-P, -32-P		
-31, -21-P, -22-P, -31-LC, -21-A-P, -21-LC-P, -22-LC-P, -31-A,	PT-1-24-05-09	TP-07
-32-LC, -22-A-P, -31-LC-K, -31-K		
-11-P, -11-LC-P, -11-A-P, -21, -21-K, -21-A, -21-LC, -21-A-K, -21-LC-K	PT-1-24-20-09	TP-07

NOTE:
PARTS TO BE PACKAGED WITH THE LOADING DIRECTION ARROW POINTED IN SAME DIRECTION AS THE ARROW ON TUBE.

PROPRIETARY NOTE
THIS DOCUMENT CONTAINS INFORMATION CONFIDENTIAL AND PROPRIETARY TO SAMTEC, INC. AND SHALL NOT BE REPRODUCED OR TRANSFERRED TO OTHER DOCUMENTS OR DISCLOSED TO OTHERS OR USED FOR ANY PURPOSE OTHER THAN THAT WHICH IT WAS OBTAINED WITHOUT THE EXPRESSED WRITTEN CONSENT OF SAMTEC, INC.

DO NOT SCALE DRAWING

SHEET SCALE: 2:1

samtec
520 PARK EAST BLVD, NEW ALBANY, IN 47150
PHONE: 812-944-6733 FAX: 812-948-5047
e-Mail: info@SAMTEC.com code: 55322

DESCRIPTION: .050 X .050 TERMINAL STRIP

DWG. NO. TFM-1XX-XX-XXX-X-XXX

BY: B RAY 7-10-2007 SHEET 5 OF 5

F:\DWG\MISC\MKTG\TFM-1XX-XX-XXX-X-XXX-MKT.SLDDRW