M. K. JUCHHEIM GmbH & Co

Delivery address: Mackenrodtstraße 14, 36039 Fulda, Germany
Postal address: 36035 Fulda, Germany
Phone: +49 661 60 03-0
Fax: +49 661 60 03-6 07
E-mail: mail@jumo.net
Internet: www.jumo.net

JUMO Instrument Co. Ltd.

JUMO House
Temple Bank, Riverway
Harlow, Essex CM20 2TT, UK

Phone: +44 12 79 63 55 33
Fax: +44 12 79 63 52 62
E-mail: sales@jumo.co.uk

JUMO PROCESS CONTROL INC.

885 Fox Chase, Suite 103
Coatesville PA 19320, USA
Phone: 610-380-8002
1-800-554-JUMO
Fax: 610-380-8009
E-mail: info@JumoUSA.com
Internet: www.JumoUSA.com

Thermostats for panel mounting Series EM with 1, 2, 3 or 4 single-pole snap-action switches

Arrangement to DIN 3440 as

TR = temperature controller
TW = temperature monitor
TB = temperature limiter
STB = safety temperature limiter

DVGW – approved to EU Gas Appliances Directive (90/396/EWG)

Applications e.g.

- refrigerators and freezers
- room heaters
- water heaters
- steam boilers
- domestic appliances, cookers
- laboratory, test and climatic cabinets
- photographic laboratories
- electrical floor heating
- ovens and furnaces
- mechanical equipment

Temperature ranges from –50 to +500 °C

***EMf-1, EMf-2, EMf-4, EMf-50 only; **EM-50 only**

DVGW**

Type designation

EM..-.. Thermostat, panel-mounting, with single-pole snap-action switch

EMF.-.. Thermostat, panel-mounting, with 2, 3 or 4 single-pole snap-action switches (factory-set for sequence or simultaneous switching)

s-.. with rigid stem attached to case (150 °C max.)

f-.. with capillary (normally Form A = plain cylindrical probe)

-1. temperature controller (TR) with changeover contact

-2. temperature monitor (TW) with changeover contact

-3. temperature monitor (TW) with changeover contact, switching point factory-set

-4. temperature limiter (TB) with n.c. (break) contact and lock-out, switching point factory-set

-4U temperature limiter (TB) with changeover contact, otherwise as 4.

-5. temperature limiter (TB) with n.c. (break) contact and lock-out

-5U temperature limiter (TB) with changeover contact, otherwise as 5.

-40 safety temperature limiter (STB) with n.c. (break) contact and lock-out, switching point factory-set

-50 safety temperature limiter (STB) with n.c. (break) contact and lockout

-40U safety temperature limiter (STB) with changeover contact, otherwise as 40.

-50U safety temperature limiter (STB) with changeover contact, otherwise as 50.

Standard accessory

Operating Instructions B 60.2021

Operation

A temperature change of the filling fluid in the sensing system – consisting of probe, capillary and expansion capsule – produces a volume change (liquid-filled) or a pressure change (gas-filled).

The resulting expansion movement of the capsule acts through a mechanism to operate the snap-action switch.

Safety temperature limiter STB, fail-safe

If the temperature rises and the limit setting is exceeded, the circuit 1-2 of switch II opens and remains locked mechanically in this position.

If the sensing system is damaged, i.e. if the filling fluid leaks out, the pressure in the capsule drops and the circuit 1-4 of switch I opens permanently. If the probe is cooled below –20 °C, the circuit 1-4 of switch I opens, but closes automatically as the temperature rises above –15 °C.

Lock-out

On the limiters TB and STB a temperature rise above the limit setting opens the circuit and the thermostat is locked out mechanically. The switch can be reset manually after the temperature has fallen approx. 10 % of span below the setting.

In case of limits above 120 °C the limit setting on the STB must be locked to prevent any shift.

Ordering examples

Panel-mounting thermostat Type EMf-1

Range: 0 +100 °C
Differential: 2.5 %
Capillary: 1 m
Probe mounting*:
Probe*:

Panel-mounting thermostat Type EMFf-1333

Range: 0 +100 °C
Differential: 2.5 %
Capillary: 2 m
Probe mounting*: pocket U ½" 8 –150 Brass
Contact spacing: +2 °C, +4 °C, +6 °C

*specify only if different from standard version

Ranges and probes for liquid-filled thermostats TR, TW, TB

Range	Switching differential	Max. probe temperature	Max. switch head temperature	Max. capillary length	Max contact spacing	Length L with bulb dia. mm	
°C	%	°C	°C	m	°C	6[2]	8
–50 +30	**1**	+ 50	+ 50	5	8	191	118
	2.5	+ 50	+ 50		16	191	118
	5	+100	+ 50 (80)[1]		40	112	77
	7	+170	+ 50 (80)[1]		80	85	64
–20 +40	**1**	+ 50	+ 50	5	5	245	145
	2.5	+ 50	+ 50		8	245	145
	5	+ 95	+ 50 (80)[1]		25	138	91
	7	+150	+ 50 (80)[1]		50	103	73
0 +50	**1**	+ 60	+ 60	3	5	286	166
	2.5	+ 60	+ 60	3	10	286	166
	5	+105	+ 60 (80)[1]	5	25	159	101
	7	+170	+ 60 (80)[1]	5	50	117	80
+20 +90	**1**	+105	+ 80	1	7	210	127
	2.5	+105	+ 80	1	14	210	127
	5	+160	+100	5	35	121	82
	7	+200	+100	5	70	91	67
0 +100	**1**	+125	+ 80	2	10	157	100
	2.5	+125	+ 80	2	20	157	100
	5	+200	+100	5	50	94	68
	7	+280	+100	5	100	73	58
+30 +110	**1**	+135	+ 80	2	8	188	116
	2.5	+135	+ 80	2	16	188	116
	5	+200	+100	5	40	110	76
	7	+280	+100	5	80	84	63
0 +150	**1**	+173	+ 80	1	15	113	78
	2.5	+173	+100		30	113	78
	5	+280	+100		75	72	57
0 +200	**1**	+230	+ 80	1	20	114	78
	2.5	+230	+100		40		
+50 +200	**1**	+230	+ 80	1	15	141	92
	2.5	+230	+100		30		
+50 +250	**1**	+288	+ 80	1	20	106	70
	2.5	+288	+100	1	40	106	70
	5	+300	+100	5	100	64	49
+50 +300	**1**	+345	+ 80	2	25	88	56
	2.5	+345	+100		50		

[1] Values in brackets to special order only, subject to operating conditions and capillary lengths [2] 6 mm dia. is standard

Ranges and probes for gas-filled thermostats TR, TW, TB

Range	Switching differential	Max. probe temperature	Max. switch head temperature	Max. capillary length	Max contact spacing	Probe length L in mm bulb dia. mm, material st. steel			
°C	%	°C	°C	m	°C	5	6[2]	7	8
+20 +400	6	+460	+100	5	75	355	237	174	137
	10	+500	+100		200	183	127	98	81
+20 +500	3 / 5	+530	+ 80	1	48	–	278	203	158
	6	+575	+100	5	95	261	176	132	106
	10	+575	+100	5	250	134	95	76	65

[2] 6 mm dia. is standard

If the maximum permitted temperature at probe, capillary and switch head is not fully utilised it may be possible to increase the capillary length where it is restricted to 1, 2 or 3 m according to the range and probe table. Please contact the factory, specifying the actual temperatures to which the thermostat is exposed.

Technical data and probe dimensions for Codes 4, 4U, 5 and 5U are as for 2.5 % differential

Ranges and probes for liquid-filled safety temperature limiters STB

Setting range	Scale length	Max. probe temperature	Max. switch head temperature	Limit tolerance	Max. capillary length	Probe length L in mm bulb dia. mm, material copper	
°C	°∠	°C	°C	°C	m	6[2]	8
+75 +100	78	+125	+100	–5	5	84	63
+85 +110	78	+135	+100	–4	5	84	63
						material st. steel	
+120 +150 +160 +200 +210 +250 +250 +300	**77** 79 71 79	+175 +230 +288 +345	+100	– 8 –10 –12 –13	5	80 64 61 55	57 49 47 44

Ranges and probes for gas-filled safety temperature limiters STB

Setting range	Scale length	Max. probe temperature	Max. switch head temperature	Limit tolerance	Max. capillary length	Probe length L in mm bulb dia. mm, material st. steel	
°C	°∠	°C	°C	°C	m	6[2]	8
+300 +400 +350 +500	70 72	+460 +575	**+100**	–16 –20	**3**	148 127	92 81

[2] 6 mm dia. is standard
On thermostats with factory-set switching points, please specify switch-off point in addition to the setting range, e.g. setting range +75 +100 °C, set to +95 °C.

Type combinations

Single-pole snap-action switch

Type
EMf-1
EMf(s)-2
EMf(s)-3
EMf(s)-4
EMf(s)-4U
EMf(s)-5
EMf(s)-5U

2 single-pole snap-action switches

Type
EMFf-13
EMFf(s)-23
EMFf(s)-33
EMFf-14
EMFf(s)-24
EMFf(s)-44

3 single-pole snap-action switches

Type
EMFf-133
EMFf-134
EMFf(s)-233
EMFf(s)-234
EMFf-333
EMFf(s)-444
EMFf(s)-544

4 single-pole snap-action switches

Type
EMFf-1333
EMFf(s)-2333
EMFf(s)-3333

Fail-safe versions
EMf(s)-40
EMf(s)-50

Technical data

Designation	Code	Description			
Contact spacing on multi-pole thermostats		switching differential		minimum contact spacing % of span	accuracy of contact spacing, % of span
		liquid filled	gas filled		
		1 %	–	1 %	1% or less
		2.5 %	–	1 %	1% or less
		5 %	2 %, 4 %	2 %	less than 2%
		7 %	6 %, 8 %	3 %	less than 3%
		The contact spacing is specified in °C against the setpoint of switch I (The switch number is marked on the back on the underside of the base) Sign – = switching before setpoint Sign + = switching after setpoint For simultaneous switching specify contact spacing = 0.			

Switching differential in %	TR, TW	with liquid-filled measuring system				with gas-filled measuring system		
		Nominal value		Possible actual value		Nominal value		Possible actual value
		2,5	standard	2,5 max. 3,5		5	standard	5 max. 11
		5	on request	5 max. 6		6	on request	6 max. 14
		7	on request	7 max. 8		10	on request	10 max. 16
		1	at extra cost	1 max. 2		3	at extra cost	2,5 max. 4

Case		steel, zinc-plated normally fixed with 2 screws M3 spaced 22 mm;
	b1	with 2 screws M4 spaced 28 mm;
	b2	with 2 screws M3 spaced 33 mm;
	b7	central fixing M10 x 1 with cap (only on temperature limiter TB, Code 4 and 5)

Designation	Description		
Material, capillary and probe mounting to Data Sheet 60.6710	Top end of scale	Capillary	Probe
	to +200 °C	copper 1.5 mm dia. Mat.Ref. 2.0090	copper Mat.Ref. 2.0090 brazed
	to +350 °C	copper 1.5 mm dia. Mat.Ref. 2.0090	st.steel Mat.Ref. 1.4571 brazed
	to +500 °C	st. steel 1.5 mm dia. Mat.Ref. 1.4571	st. steel Mat.Ref. 1.4571 welded
	at extra charge		
	to +350 °C	st.steel 1.5 mm dia. Mat.Ref. 1.4571	st.steel Mat.Ref. 1.4571 welded

Capillary lengths	1 m standard, 2, 3 or 5 m at extra charge **Min. bending radius** 5 mm **Note:** If the maximum permitted temperature at probe, capillary and switch head is not fully utilised it may be possible to increase the capillary length where it is restricted to 1, 2 or 3 m according to the range and probe table. Please contact the factory, specifying the actual temperatures to which the thermostat is exposed.

Probe forms, probe mountings and pockets	see Data Sheet 60.6710

Setpoint knob	see Data Sheet 60.6715

Electrical connection		normally	faston tabs A 6.3 x 0.8 to DIN 46 244
	Code X	screw terminals up to 2.5 mm² conductor cross-section (extra charge) - can be retrofitted	

Designation	Description
Switch	1, 2, 3 or 4 single-pole snap-action switches Code 1, 2, 3, 4U, 5U, 40U and 50U with changeover contact Code 4, 5, 40 and 50 with n.c. (break) contact

Current rating	Code	Differential	Current		Voltage
			terminal 2	terminal 4	
	TR, TW 1, 2, 3	2.5 %, 5 %, 7 %, 5 %, 6 %, 10 %	16 (3) A 0.25 A	8 (1.5) A 0.25 A	230 V AC, p.f. = 1(0.6) 230 V DC
	TR, TW 1, 2, 3	1 % 2 %	6 (2) A 0.25 A		
	TB, STB, 4U, 5U, 40U, 50U		16 (3) A 0.25 A	2 (1) A 0.25 A	
	TB, STB 4, 5, 40, 50		16 (3) A 0.25 A		

Switching point accuracy	(in % of span, referred to setpoint or limit at +22 °C ambient temperature, on temperature rise)				
		Code	Switching differential		in top third of scale or at limit
			liquid filled	gas filled	
	TR	1	1 %, 2.5 % 5 % 7 %	– 3 %, 5 % 6 %, 10 %	±1.5 % ±3 % ±4 %
	TB	4, 4U, 5, 5U	–	–	+0 % –5 %
	TW	2, 3	1 %, 2.5 % 5 % 7 %	– 3 %, 5 % 6 %, 10 %	+0 / –3 % +0 / –6 % +0 / –8 %
For switching point accuracy of STB (40, 50) see Table of ranges and probes, page 3)					

Temperature compensation[6]		Code	only on Type:
	TR / TW	TK	EMf-1-TK, EMf-2-TK, EMf-3-TK EMFf-13-TK, EMFf-23-TK, EMFf-33-TK

[6] for detailed information see the graph on the last page of this Data Sheet.

Mean ambient temperature error referred to span	Deviation of the ambient temperature at the switch head and capillary from the +22 °C calibration temperature produces a displacement of the switching point. Higher ambient temperature = lower switching point Lower ambient temperature = higher switching point		
	on capillary % per °C per m		
	below 200 °C 0.08	200 °C to 350 °C 0.04	400 °C to 500 °C 0.05
	If the operating temperature at the capillary differs appreciably from the +22 °C calibration temperature, this can be taken into account in the calibration at extra charge. On Type EM Code 1 the correction can be made by the user on the setpoint knob 02 (see Data Sheet 60.9715)		
Switching point displacement for deviation of ambient temperature at the switch head: see graphs pages 9 - 11.			

Scale length	normally 250 °∠

⚠ Note

At present there is no restrictive statement from the health authorities concerning any danger to health over short periods and at low concentrations, e.g. after fracture of the measuring system.

Physical and toxicological properties of the expansion media which may escape in case of system fracture							
Range with end of scale °C	Dangerous reactions	Fire/explosion hazard		Water contamination	Toxicological data		
		Ignition temperature °C	Explosion limit % v/v		irritant	danger to health	toxic
below 200 °C	–	+280	1.2 — 7.5	x	x	x	–
200 °C to 350 °C	–	+490	1 — 3.5	x	x	x	–
400 °C to 500 °C	–	–	–	–	–	x	x

Permitted ambient temperature at switch head and capillary
in operation

max. see probe table

min. –40 °C with top of scale below 200 °C
–20 °C with top of scale 200 °C to 350 °C
–40 °C with top of scale 400 °C to 500 °C

Permitted storage temperature
switch head, capillary, probe
+50 °C max.
–50 °C min.

Protection
IP00 to EN 60 529

Operating position
unrestricted

Connection diagrams

EM- 1
2
3

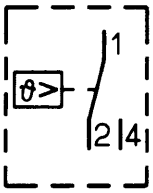

EM- 4
5

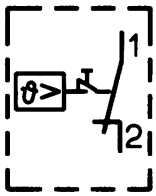

EMF- 13
23
33

I = setpoint
II = follow-on contact

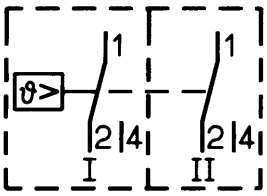

EM- 4U
5U

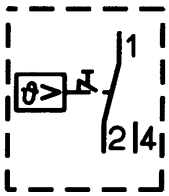

EMF- 133
233
333

I = setpoint
II and III
= follow-on contact

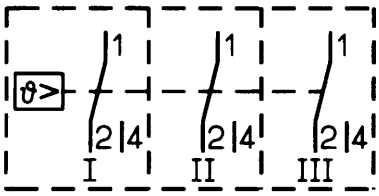

EM- 40
50

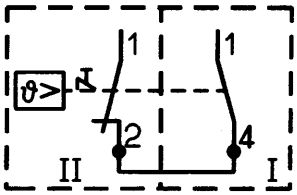

EMF- 1333
2333
3333

I = setpoint

II, III and IV
= follow-on contact

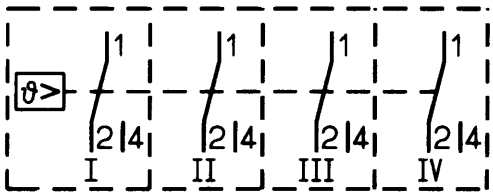

EM- 40U
50U

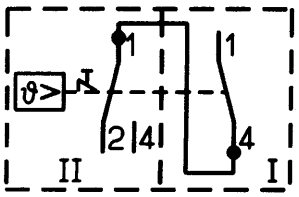

For other type variants the connection diagrams must be appropriately combined

Example: EMF-1334

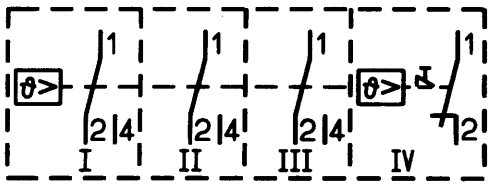

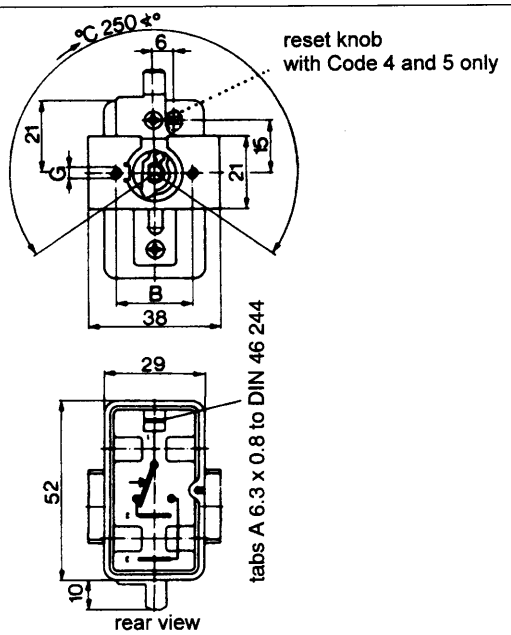

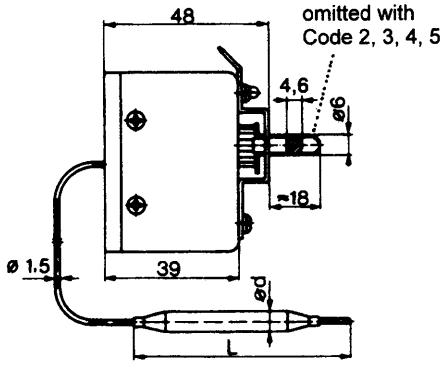

Code	B	thread G
standard	22	M3
b1	28	M4
b2	33	M3

EMf-1

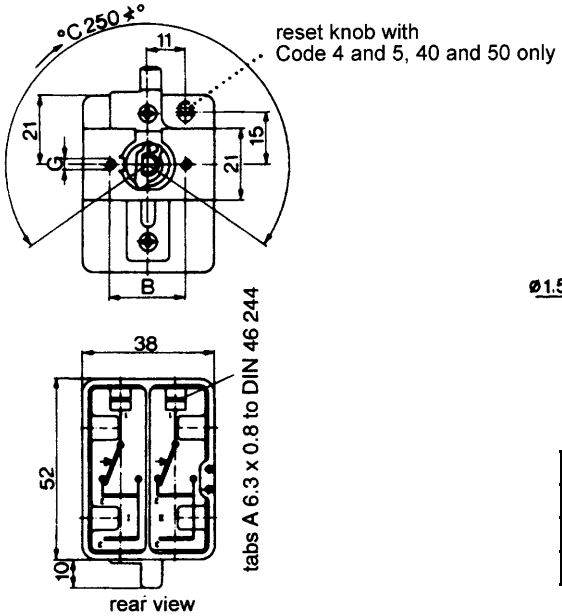

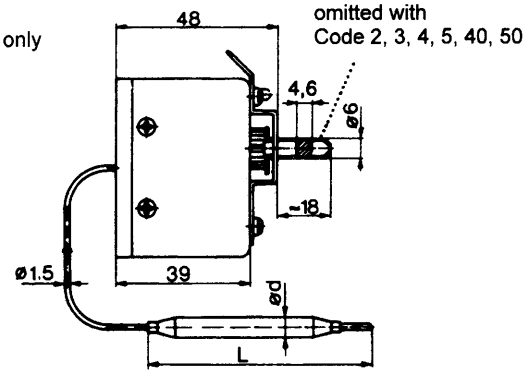

Code	B	thread G
standard	22	M3
b1	28	M4
b2	33	M3

EMFf-13

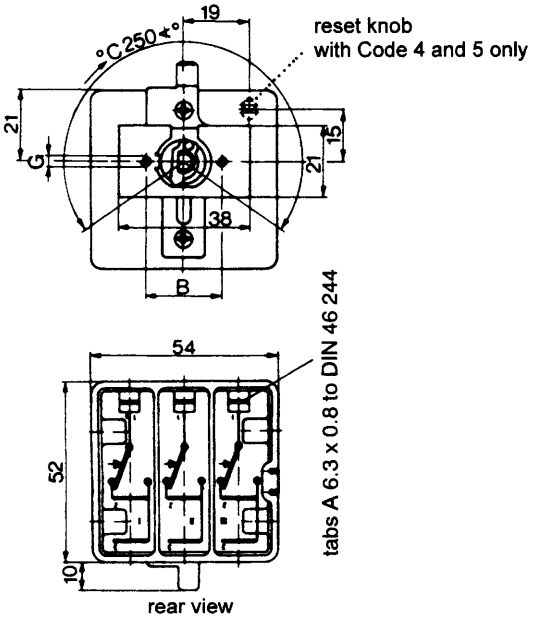

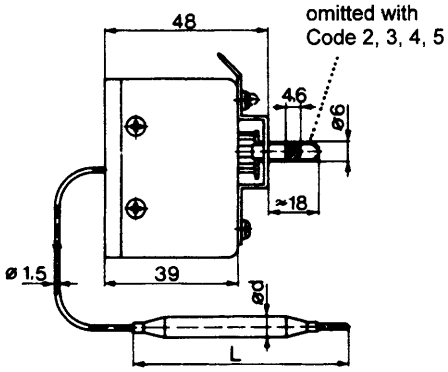

Code	B	thread G
standard	22	M3
b1	28	M4
b2	33	M3

EMFf-133

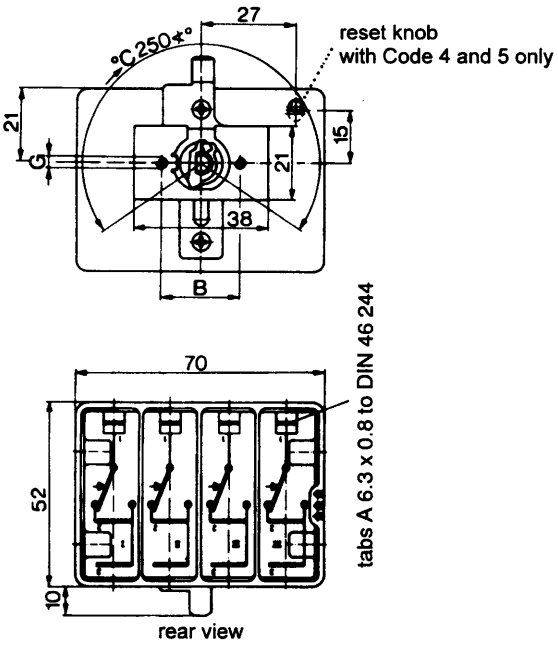

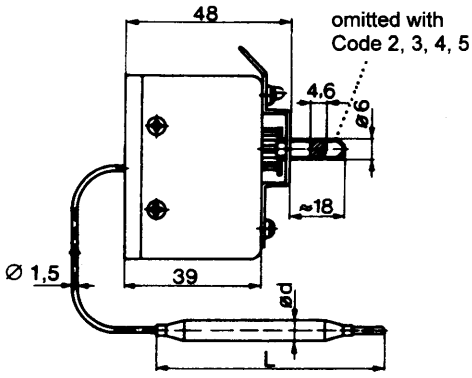

Code	B	thread G
standard	22	M3
b1	28	M4
b2	33	M3

EMFf-1333

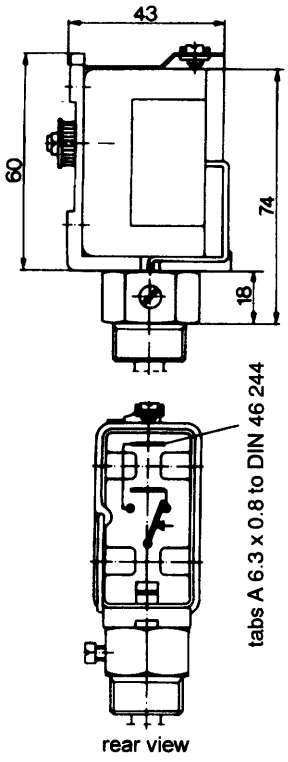

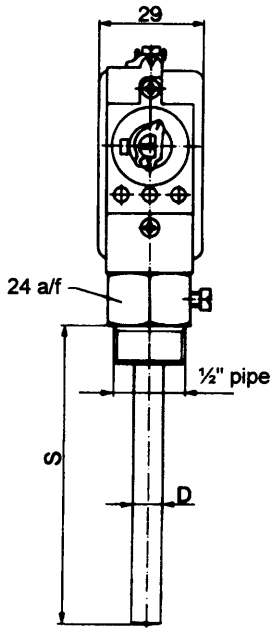

EMs-2

Screw-connections EM-1
Extra Code x

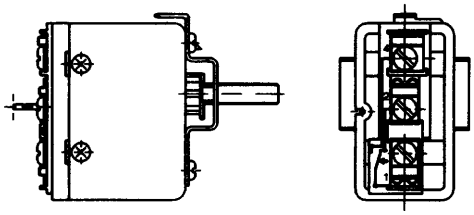

Temperature compensation (TK)

Deviation of the ambient temperature at the switch head from the +22 °C calibration temperature produces a displacement of the switching point. With large fluctuations in ambient temperature it is useful to employ thermostats with temperature compensation (Code TK).

Switching point deviation as a function of ambient temperature at the switch head, taking into account the switching differential.

The influence of temperature on the capillary has not been allowed for, and may introduce an additional error.

Without temperature compensation

End of scale below +200 °C

Type EM 1-pole / 2-pole

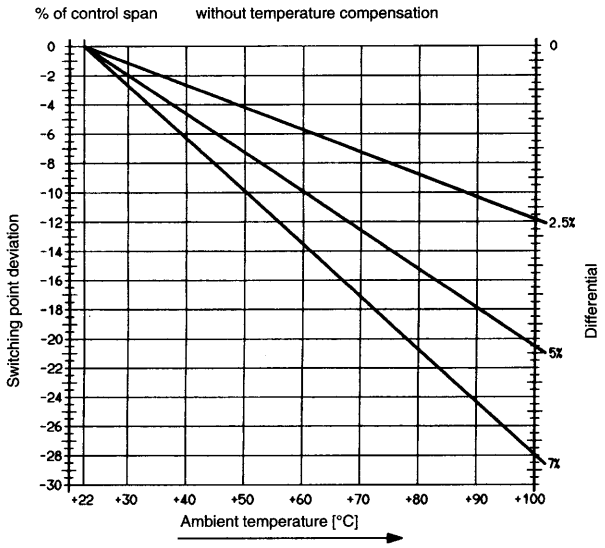

mm	inch	mm	inch	mm	inch
0.8	0.031	77	3.03	151	5.94
1.5	0.06	78	3.07	154	6.06
4.6	0.18	80	3.15	156	6.14
5	0.20	81	3.19	157	6.18
6	0.24	82	3.23	158	6.22
6.3	0.25	83	3.27	159	6.26
7	0.28	84	3.31	162	6.38
8	0.31	85	3.35	163	6.42
10	0.39	86	3.39	166	6.54
11	0.43	88	3.46	169	6.65
15	0.59	90	3.54	174	6.85
18	0.71	91	3.58	176	6.93
19	0.75	92	3.62	177	6.97
21	0.83	93	3.66	182	7.17
22	0.87	94	3.70	183	7.20
27	1.06	95	3.74	188	7.40
28	1.10	96	3.78	191	7.52
29	1.14	98	3.86	196	7.72
30	1.18	99	3.90	200	7.87
38	1.50	100	3.94	203	7.99
39	1.54	101	3.98	210	8.27
43	1.69	103	4.06	211	8.31
44	1.73	106	4.17	224	8.82
47	1.85	108	4.25	228	8.98
48	1.89	110	4.33	237	9.33
49	1.93	111	4.37	245	9.65
52	2.05	112	4.41	247	9.72
54	2.13	113	4.45	261	10.28
55	2.17	114	4.49	273	10.75
56	2.20	116	4.57	275	10.83
57	2.24	117	4.61	278	10.94
58	2.28	118	4.64	279	10.98
60	2.36	121	4.76	286	11.26
61	2.40	122	4.80	306	12.05
63	2.48	123	4.84	308	12.13
64	2.52	127	5.00	344	13.54
65	2.56	132	5.20	355	13.98
67	2.64	134	5.28	363	14.29
68	2.68	135	5.31	375	14.76
70	2.76	137	5.39	427	16.81
71	2.80	138	5.43		
72	2.83	141	5.55	2.5 mm^2	0.004in^2
73	2.87	142	5.59		
74	2.91	145	5.71	1 m	3.3 ft
75	2.95	148	5.83	2 m	6.7 ft
76	2.99	150	5.91	3 m	10 ft
				5 m	17 ft

With temperature compensation

End of scale below +200 °C

Type EM 1-pole-TK

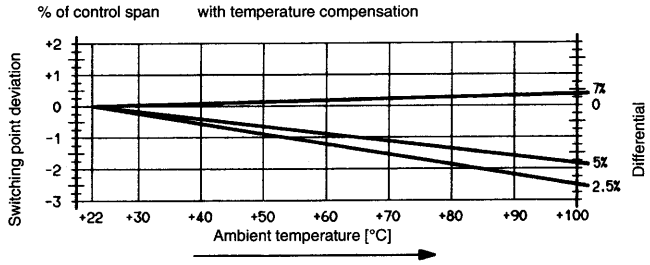

Type EM 2-pole-TK/1

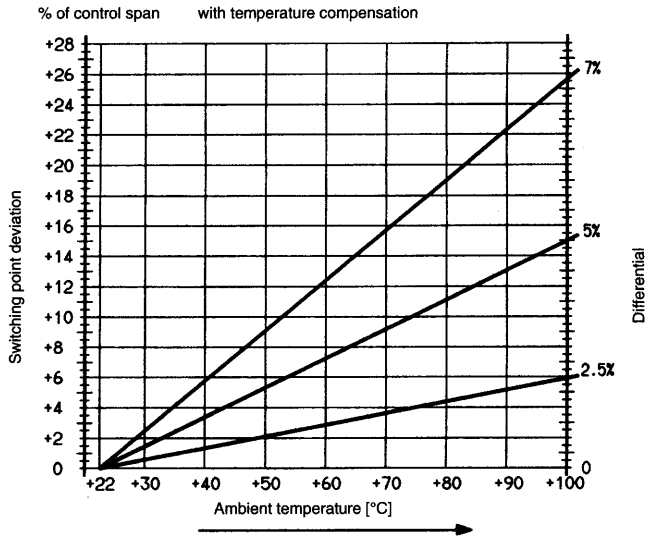

Type EM 2-pole-TK/2

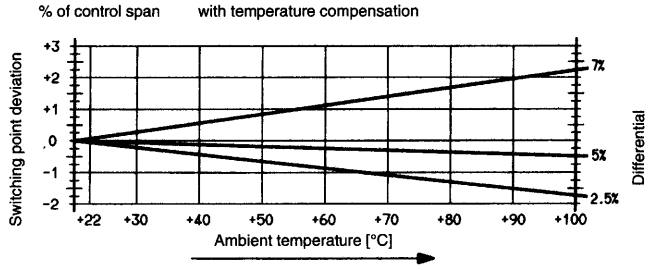

Without temperature compensation
End of scale between +200 °C and +350 °C

Type EM 1-pole / 2-pole

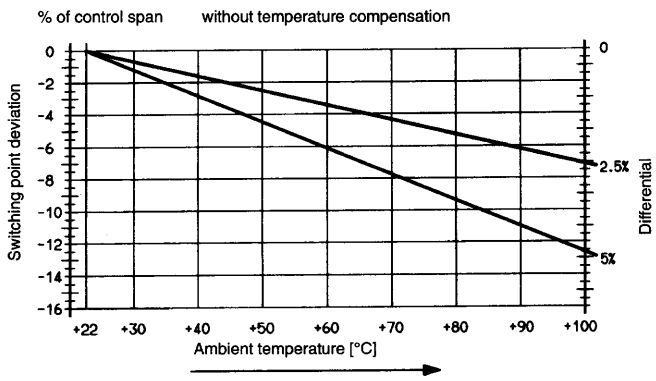

With temperature compensation
End of scale between +200 °C and +350 °C

Type EM 1-pole-TK

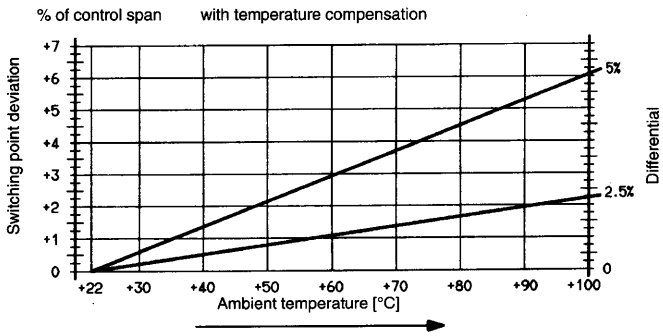

Type EM 2-pole-TK/1

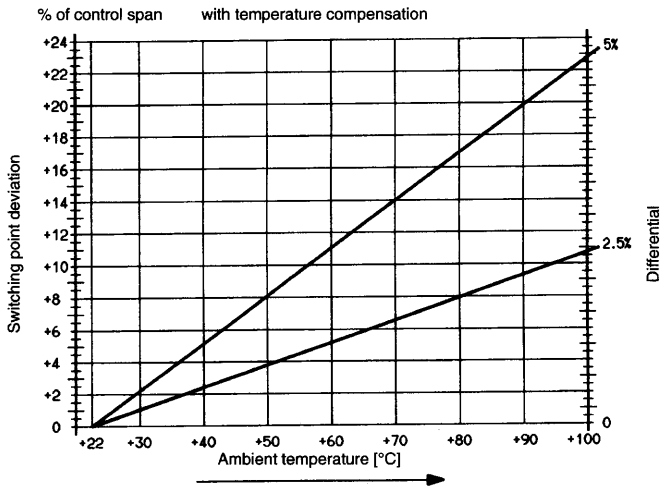

Type EM 2-pole-TK/2

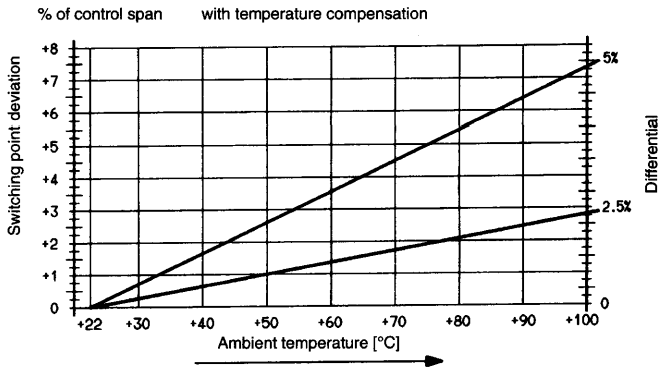

Without temperature compensation
End of scale between +400 °C and +500 °C

Type EM 1-pole / 2-pole

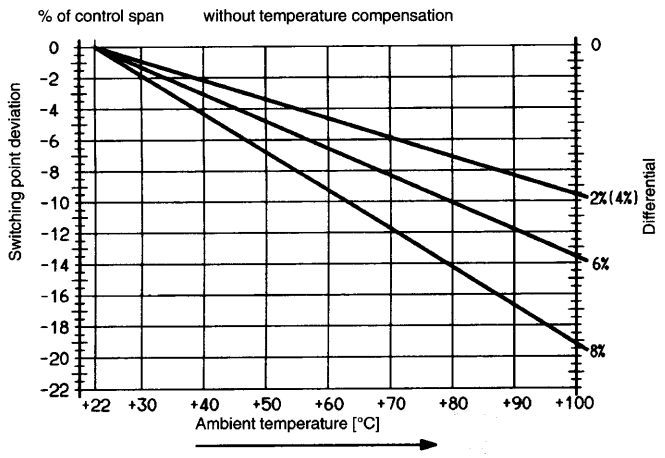

With temperature compensation
End of scale between +400 °C and +500 °C

Type EM 1-pole-TK

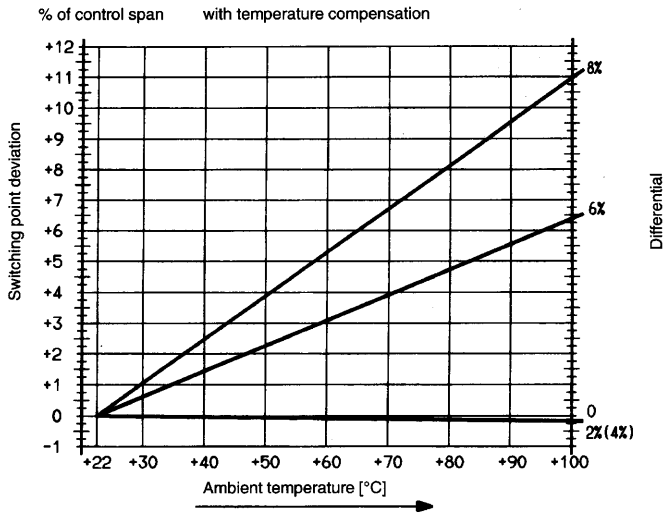

Type EM 2-pole-TK/1

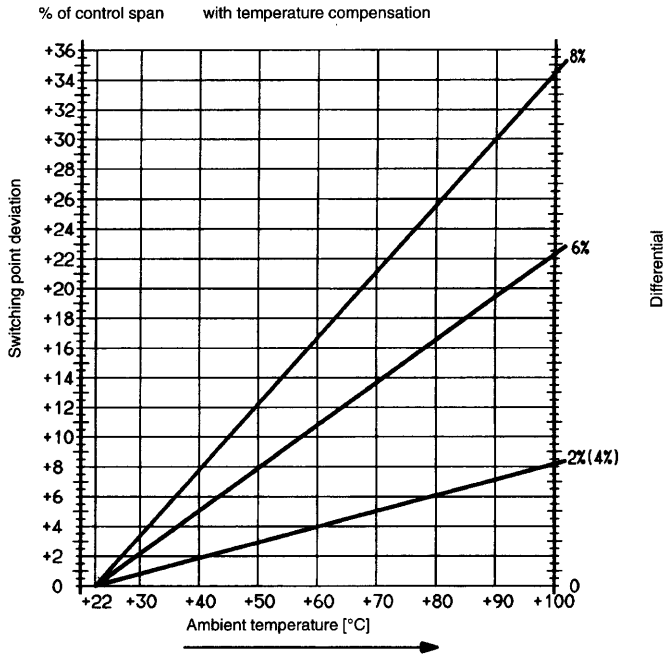
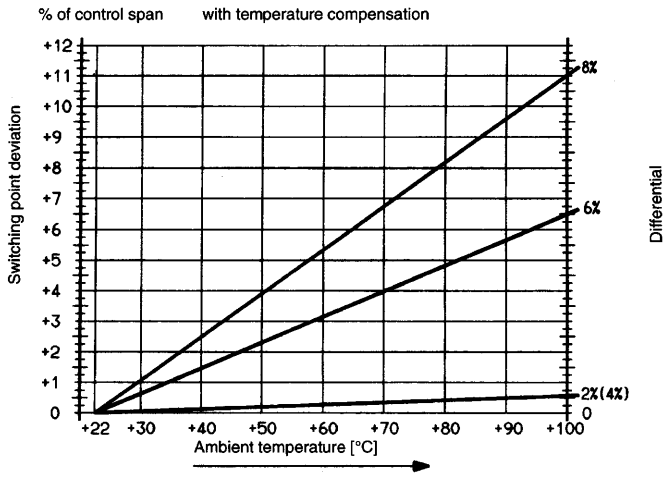
Type EM 2-pole-TK/2