3115FS (80□ x 38L)

General Specifications

Allowable Ambient Temperature Range:
-10°C ~ +70°C (Operating)
-40°C ~ +70°C (Storage)
(non-condensing environment)

Motor Structure: Shaded Pole Induction Motor
Motor Protection: Impedance Protection

Outline

Units: inch (mm)

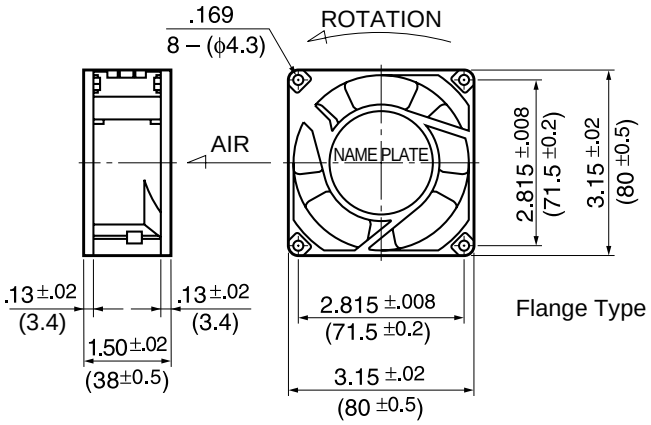

Panel Cut-outs

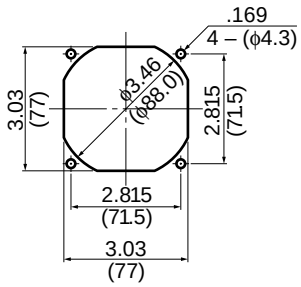

INLET SIDE / OUTLET SIDE

Material

Casing : Aluminum
Impeller : UL94V-O Reinforced Plastic
Bearing : Ball Bearings
Lead Wire : AWG22, UL3266, CSA CL1252
or Terminal : Faston #110 or equivalent

Specifications

MODEL	Rated Voltage	Frequency	Starting Voltage	Current	Input Power	Speed	Max. Air Flow		Max. Static Pressure		Noise	Mass
	(V)	(Hz)	(V)	(A)*1	(W)$^{+10\%}_{-20\%}$	(min^{-1})*2	CFM*2	(m^3/min)*2	in H_2O	(Pa)*2	(dB)*2	(g)
3115FS-12T-B00-A00	115	60	75	0.045	4.0	1850	18.0	0.51	.07	17.5	31	340
3115FS-12T-B10-A00	115	60	75	0.087	6.0	2100	22.0	0.62	.09	22.5	36	340
3115FS-12T-B20-A00	115	60	75	0.090	7.0	2700	27.0	0.76	.13	32.5	40	340
3115FS-12T-B30-A00	115	60	75	0.100	8.5	3250	32.0	0.90	.18	45.0	44	340
3115FS-23T-B10-A00	230	60	175	0.050	6.5	2050	20.0	0.57	.09	22.5	35	340
3115FS-23T-B20-A00	230	60	175	0.060	7.5	2750	28.0	0.79	.13	32.5	40	340
3115FS-23T-B30-A00	230	60	175	0.065	8.0	3250	33.0	0.93	.18	45.0	44	340

Rotation: Counterclockwise Airflow Outlet: Air In Over Struts *1: Maximum Values in Free Air *2: Average Values in Free Air