THIS DRAWING IS UNPUBLISHED
VERTRAULICHE UNVEROEFFENTLICHE ZEICHNUNG
RELEASE FOR PUBLIKATION ,2000
FREI FUER VEROEFFENTLICHUNG
© COPYRIGHT 2000 BY AMP INCORPORATED ALL RIGHTS RESERVED
ALLE RECHTE VORBEHALTEN

MATED WITH: PASSEND ZU:	LOC	DIST
BG5	AI	-

PROJEKT NR. EGGMA05416

REVISIONS / AENDERUNGEN

P	LTR	DESCRIPTION BESCHREIBUNG	DATE	DWN	APVD
	A1	NEW DRAWN	3/2/2006	PB	ST

NOTES

1 PACKAGING QUANTITY: 5 PIECES PER BOX

2 MATERIAL: HOUSING: ALUMINIUM DIECASTING ALLOY

3 FINISH: VARNISH GREY

4 VARNISH ON THE INSIDE NOT NECESSARY

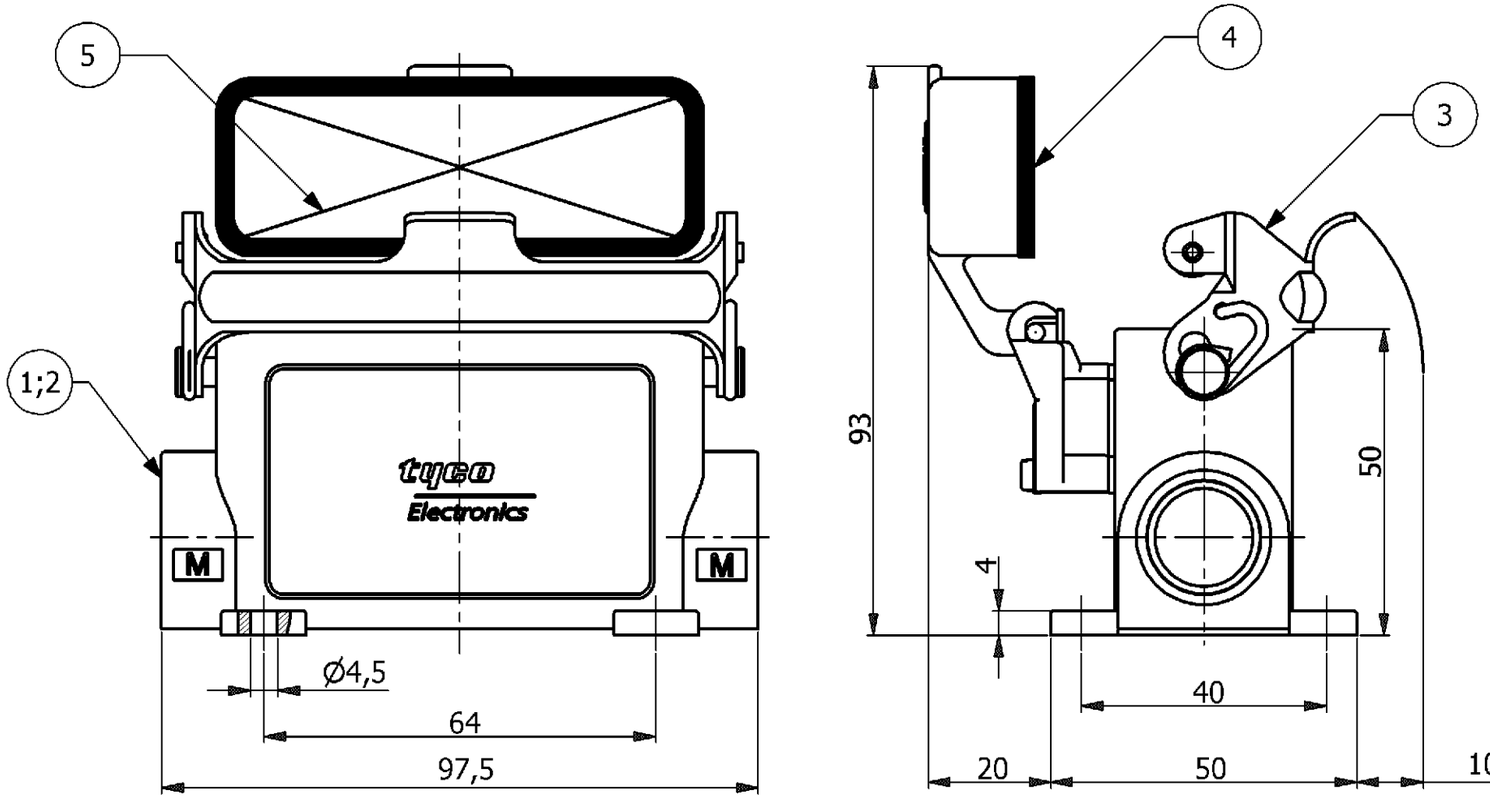

PN 0-1 as shown

(1 : 2)

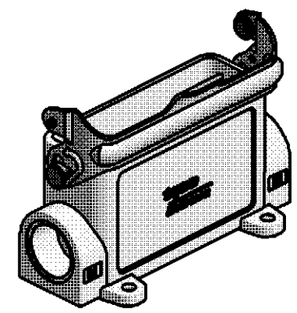

PN 0-2

Ordering Text
HA.16.SGD-LB.1.M20.Z

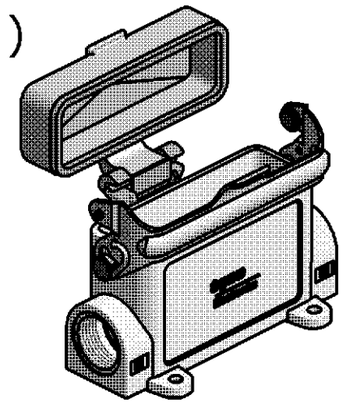

PN 0-1

Ordering Text
HA.16.SG-LB.1.M20.Z

0-2	0-1	DESCRIPTION	MATERIAL	SURFACE	COLOR	ITEM NO.	REMARKS
			2	3	3		
1	-	Cover	Aluminium	-	Grey	5	-
1	-	Profile Seal	Neoprene	-	Black	4	-
1	1	Side Clip	Steel	Zinc Plated	Blue	3	-
1	-	Surface Mounted Housing-Side Entry	Aluminium	-	Grey	2	-
-	1	Surface Mounted Housing-Side Entry	Aluminium	-	Grey	1	-

PART LIST

THIS DRAWING IS A CONTROLLED DOCUMENT FOR AMP INCORPORATED. IT IS SUBJECT TO CHANGE AND THE CONTROLLING ENGINEERING ORGANIZATION SHOULD BE CONTACTED FOR THE LATEST REVISION. DIESES ZEICHNUNGSDOKUMENT WIRD DURCH AMP INCORPORATED KONTROLLIERT. AENDERUNGEN, DIE DEM TECHNISCHEN FORTSCHRITT DIENEN, SIND VORBEHALTEN. DEN JEWEILS LETZTGUELTIGEN AENDERUNGSSTAND ERFAHREN SIE AUF ANFRAGE.

DIMENSIONS: DIMENSIONEN: mm

TOLERANCES UNLESS OTHERWISE SPECIFIED: ALLGEMEINTOLERANZEN
n. ISO 8015 -
n. ISO 2768 - mH-E
n. DIN 16901- 140
0 PLC #
1 PLC #
2 PLC #
3 PLC #
ANGLES / WINKEL #

MATERIAL 2

FINISH / OBERFLAECHE / FARBE 3

DWN	P.BENNUR	3/2/2006
CHK	R.SRINIVAS	3/2/2006
APVD	T.SCHNURPFEIL	3/2/2006
PRODUCT SPEC. PRODUKTSPEZ.	-	
APPLICATION SPEC. VERARBEITUNGSSPEZ.	-	
WEIGHT GEWICHT	-	

tyco Electronics

Tyco / Electronics AMP GmbH
D - 53819 Neunkirchen

NAME
SURFACE MOUNTED HOUSING, SIDE ENTRY
HA.16.SG/D-LB.2.M20.Z

SIZE	CAGE CODE	DRAWING NO ZEICHNUNGS-NR.	RESTRICTED TO NUR FUER
A3	00779	C- 1106438	

CUSTOMER DRAWING / KUNDENZEICHNUNG

SCALE MASSSTAB	SHEET BLATT	OF VON	REV.
1:1	1	1	A1