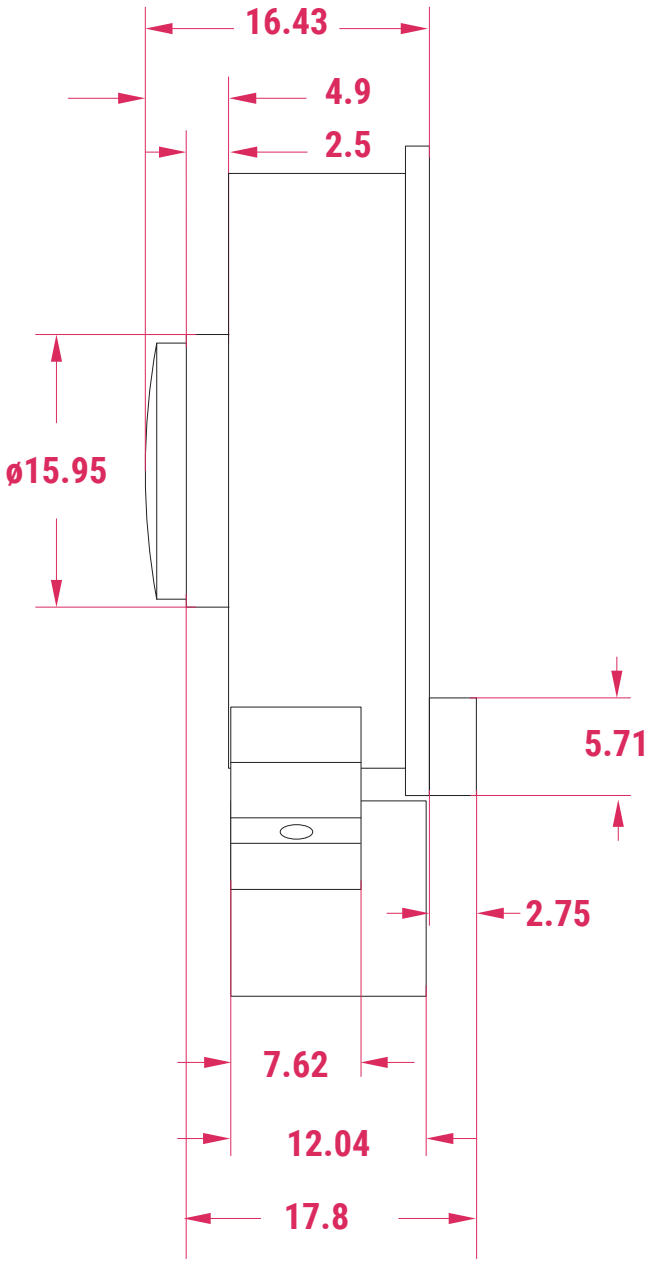

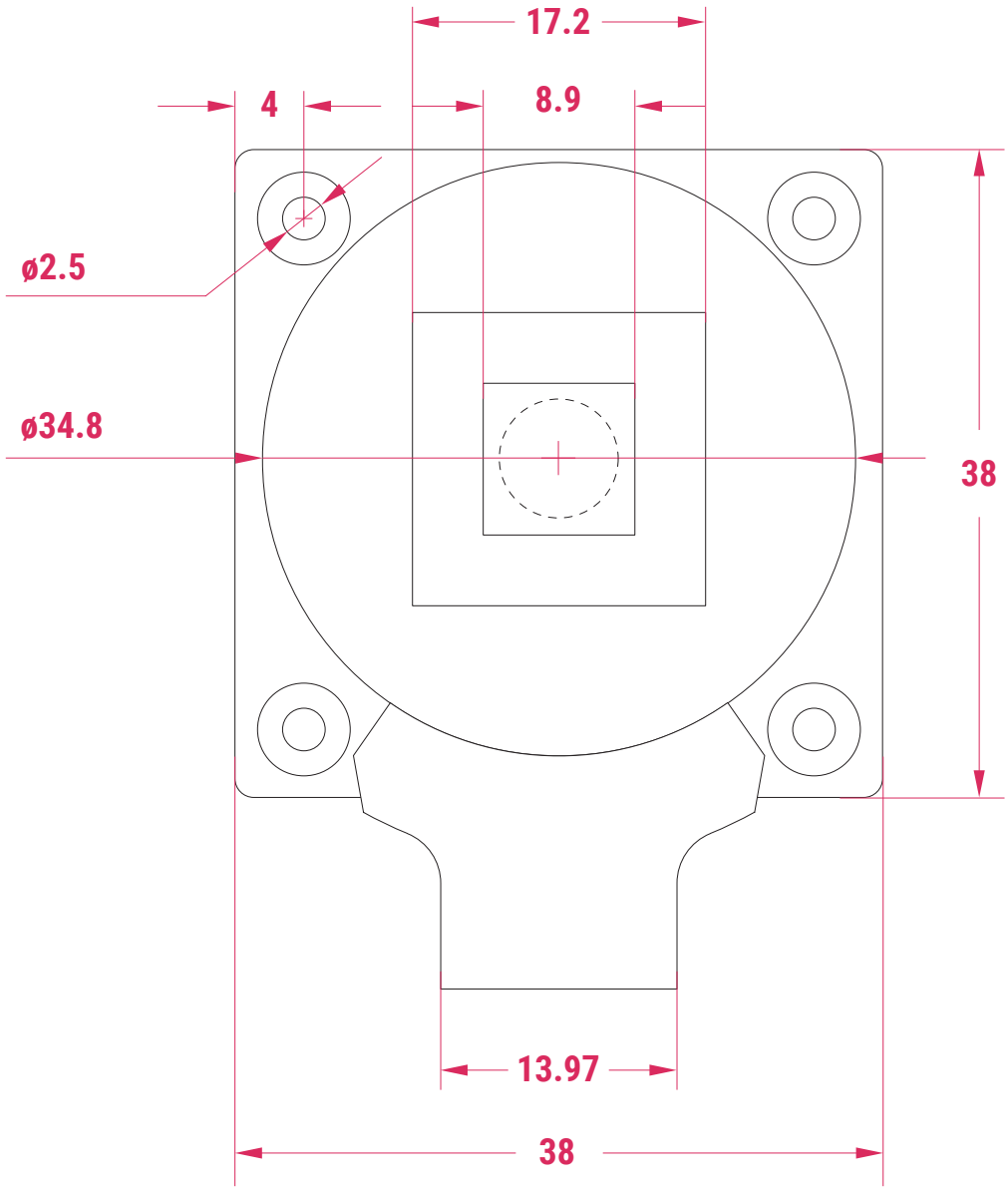

Note: all dimensions in mm