∅ d	D	H1)	H1	M1)	A	L	E1	E2	E3	E4
12	22	18	35	21,5	43	39	32	23	34	32
16	26	22	42	26,5	53	43	40	26	42	35
20	32	25	50	30,0	60	54	45	32	50	45
25	40	30	60	39,0	78	67	60	40	64	20

∅ d	S2)	S1	S23)	N1	N2	H3	L3	V	H4
12	4,3	M5	4	16.5	11	10	10,5	5,0	10
16	5,3	M6	4	21.0	13	10	11,5	5,0	13
20	6,6	M8	5	24.0	18	10	13,5	5,0	16
25	8,4	M10	6	29.0	22	10	15,0	6,5	20

∅	Radial Clearance µm Shaft h6	h7	Load Capacities4) (N) Dynamic C	Static Co
12	+38 +10	+43 +12	770	420
16	+38 +10	+43 +12	940	530
20	+43 +11	+49 +13	1860	1050
25	+43 +11	+49 +13	3640	2180

1) When screwed down, relative to shaft nominal dimension d.
2) Mounting screws to DIN 912-8.8.
3) Centre-bores for locating pin holes.
3) The load capacities stated are minimum values as the position and direction of load cannot always be precisely defined.

bas66

∅	Order Code	Price Each 1+	3+	5+
12	**705-5791**			
16	**705-5808**			
20	**705-5810**			
25	**705-5821**			

Compact Linear Sets

mannesmann Rexroth

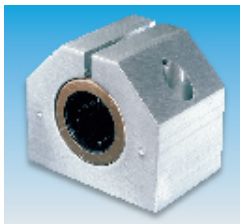

- Radial clearance easily adjustable on standard shaft (h7 or h6 tolerance)
- High load capacity due to ball tracks in steel load bearing plates
- Integral wiper seals
- Low-cost solution to most problems
- Adjusted to zero clearance on h5 shaft (lower limit)

The figures for dynamic load-carrying capacity have been calculated assuming a nominal travel of 100,000 m. For a nominal travel of 50,000 m, the 'C' figures in the table must be multiplied by a factor of 1,26.

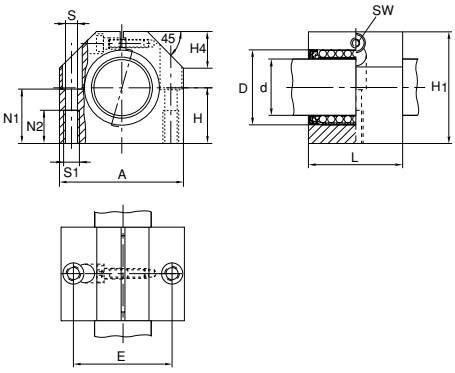

∅ d	D	H	H1	A	L	E	S1)	S1	N1	N2	H4	SW
12	19	17	33	40	28	29	4,3	M5	16	11	11	2,5
16	24	19	38	45	30	34	4,3	M5	18	11	13	2,5
20	28	23	45	53	30	40	5,3	M6	22	13	15	3,0
25	35	27	54	62	40	48	6,6	M8	26	18	17	4,0

∅ d	Load Capacities2) (N) Dynamic C	Static Co
12	730	420
16	950	500
20	1120	610
25	2330	1310

1) Mounting screws to DIN 912-8.8.
2) The load capacities stated are minimum values as the position and direction of load cannot always be precisely defined.

bas67

∅	Order Code	Price Each 1+	3+	5+
12	**705-5882**			
16	**705-5894**			
20	**705-5900**			
25	**705-5912**			

Segmantal Linear Sets

mannesmann Rexroth

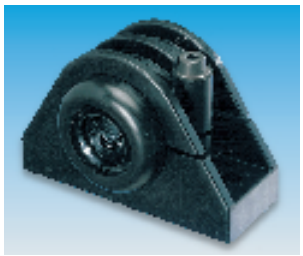

- Low noise
- Low weight
- Low price

Best value

Pillow block housing in lightweight reinforced polyamide 6,6.

Adjusted to zero clearance on h5 shaft (lower limit).

The figures for dynamic load-carrying capacity have been calculated assuming a nominal travel of 100,000 m. For a nominal travel of 50,000 m, the 'C' figures in the table must be multiplied by a factor of 1,26.

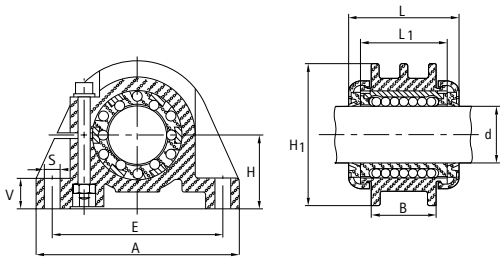

∅ d	H1)	H1	L	L1	A	B	E	S	V	Load Capacities2) (N) Dynamic C	Static Co
12	18	35	31	24	55	20	43	4,4	8,0	480	420
16	22	42	35	28	66	22	53	5,5	9,5	720	620
20	25	50	38	30	69	23	58	5,5	10,5	1020	870
25	30	60	46	37	87	30	72	6,6	11,5	1630	1360

1) Tolerance ± 0.05 relative to shaft nominal dimension 'd'.
2) The load capacities stated are minimum values as the position and direction of load cannot always be precisely defined.

bas68

∅	Order Code	Price Each 1+	3+	5+
12	**705-6011**			
16	**705-6023**			
20	**705-6035**			
25	**705-6047**			

Lightweight Shaft Support Blocks

mannesmann Rexroth

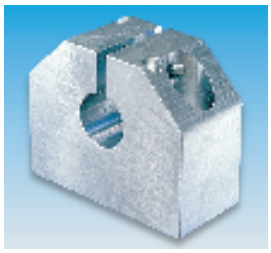

- Considerable cost benefits as compared with customer designs
- Rigid mounting of shaft due to extra-wide construction
- High dimensional accuracy makes elements interchangeable
- Centering bores provided for additional pins

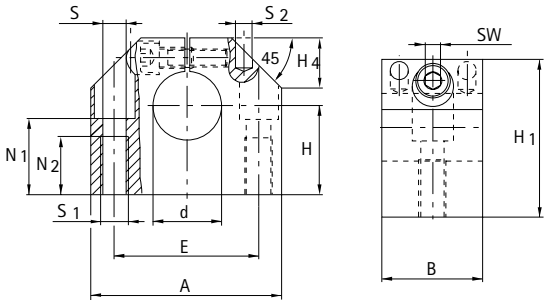

∅ d	H1)	H1	A	B	E	S2)	S1	S23)	N1	N2	SW	H4
12	20	35	43	20	30	5,3	M6	4	16,5	13	3	10
16	25	42	53	24	38	6,6	M8	5	21,0	18	4	13
20	30	51	60	30	42	8,4	M10	6	25,0	22	5	16
25	35	61	78	38	56	10,5	M12	8	30,0	26	6	20

1) Tolerance ±0.01 relative to shaft nominal dimension 'd'.
2) Mounting screws to DIN 912-8.8.
3) Two centering holes for pins.

bas63

∅	Mftrs. List No.	Order Code	Price Each 1+	3+	5+
12	1057-012-00	**705-5535**			
16	1057-016-00	**705-5547**			
20	1057-020-00	**705-5559**			
25	1057-025-00	**705-5560**			

Continued